REFERENCE 178

C. L. SCHUSKE, "TWO EXPERIMENTAL SUBCRITICAL ARRAYS OF $Pu(NO_3)_4$ SOLUTION," DOW CHEMICAL CO., ROCKY FLATS PLANT REPORT RFP-325 (JULY 1963).

RFP-325

AUG 26 1963

THE DOW CHEMICAL COMPANY
ROCKY FLATS DIVISION
GOLDEN, COLORADO

U. S. Atomic Energy Commission Contract AT(29-1)-1106

TWO EXPERIMENTAL SUB CRITICAL ARRAYS OF $Pu(NO_3)_4$ SOLUTION

by

C. L. Schuske

J. G. Epp - Technical Services Manager

I. Shielded Array of 5 in. Diameter Tanks

1. Test Vessels: 5 in. Schedule 40 stainless steel pipe (5.563" O.D., 5.047" I.D.) spaced on 2 foot centers in an in-line array. A total of 5 vertical tanks.

2. Shielding: 4 in. thick Benelex is on the top and sides of the array with a concrete floor at the base. The side shields are ~ 6 in. from the tanks, the top shield ~ 12 in. from the tanks, and the concrete floor ~ 2 in. below the tanks. There is no intervening shielding between tanks. (Benelex has a density of 1.44 g/cc.)

3. Fuel: $Pu(NO_3)_4$ solution at 5N excess HNO_3, 400 g Pu/liter.

4. Conclusion: An extrapolation of the inverse multiplication curve (Figure I) indicates that these 5 tanks could have been of infinite length and remained subcritical.

II. 30 in. Diameter Raschig Ring Filled Tank

1. Test Vessel: 30 in. diameter stainless steel tank. The Pyrex Raschig rings occupy ~ 25 v/o of the tank and contain ~ 6 w/o natural boron. The Pyrex rings have the following nominal specifications:

   O.D. - 1-1/2"
   wall - 5/32"
   height - 1-3/4"
   19% B_2O_3

2. Reflector: An "L shaped" concrete wall, 8 in. thick, bounds the tank on two sides (Figure IV) the concrete floor below the tank can be assumed infinite. The test vessel is in a room containing other tanks of solution.

3. Fuel: $Pu(NO_3)_4$ solution at 9N excess HNO_3, 350 g Pu/liter.

4. Conclusion: Extrapolation of the inverse multiplication curve (Figure III) indicates the test vessel would not be critical at any height.
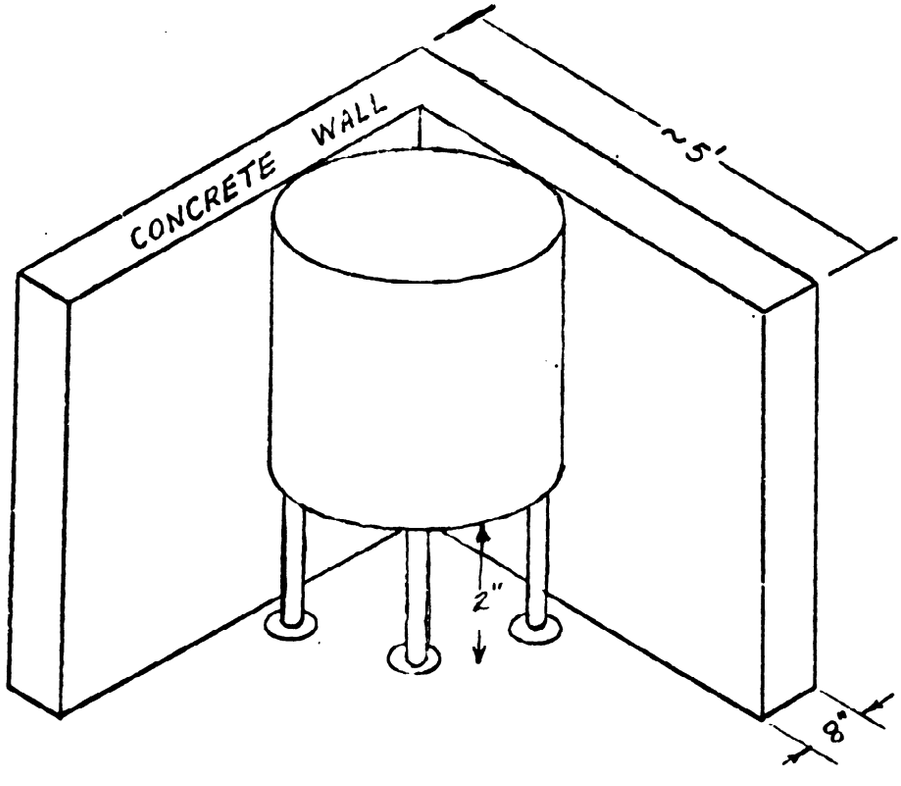
EXPERIMENTAL TANK
RASCHIG RING FILLED
FIG. 4