LLNL-PRES-668273

NCSP
NUCLEAR CRITICALITY SAFETY PROGRAM

Thermal Epithermal eXperiments (TEX) Final Design for Plutonium-Aluminum Zero Power Physics Reactor (ZPPR) with Polyethylene and Tantalum

Presented at the Nuclear Criticality Safety Program (NCSP) Technical Program Review
March 18-19, 2015 at Lawrence Livermore National Laboratory

Catherine Percher
Lawrence Livermore National Laboratory

Lawrence Livermore National Laboratory, P.O. Box 808, L-186, Livermore, CA 94551-0808
This work performed under the auspices of the U.S. Department of Energy by Lawrence Livermore National Laboratory under Contract DE-AC52-07NA27344

IER 184: Thermal/Epithermal eXperiments (TEX)

- TEX Feasibility Meeting
  - July 2011 at Sandia National Laboratories, Albuquerque, NM
  - Representatives from US, UK, and France

- Intermediate spectrum experiments needed
  - Limited Data (2.1% of ICSBEP Benchmarks)
  - Consensus prioritization of nuclear data needs (in order):
    - ^{239}Pu, ^{240}Pu, ^{238}U, ^{235}U, Temperature variations, Water density variations, Steel, Lead (reflection), Hafnium, Tantalum, Tungsten, Nickel, Molybdenum, Chromium, Manganese, Copper, Vanadium, Titanium, and Concrete (reflection, characterization, and water content)

- CED-1 (FY12) showed feasibility for three different fissile systems to create intermediate energy assemblies with various diluent materials
  - Downselect to ZPPR Pu assemblies moderated by polyethylene with tantalum diluents for CED-2

Improved PANN As-Built Model

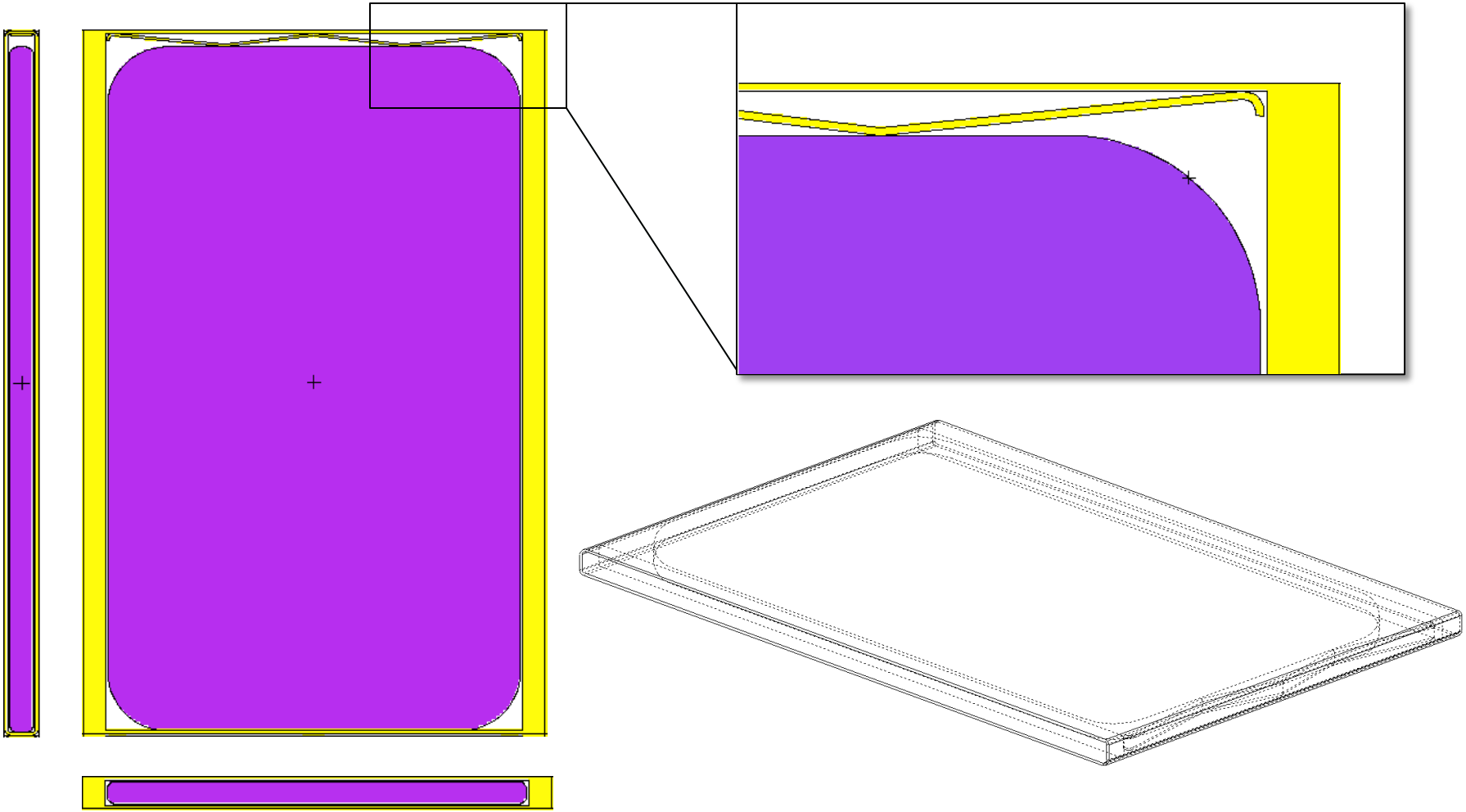

Plutonium Baseline Experiments

- Five experiments, covering thermal, intermediate and fast fission energy regimes
- PANN plates arranged in approximately 12” x 12” layers (6 plates by 4 plates)

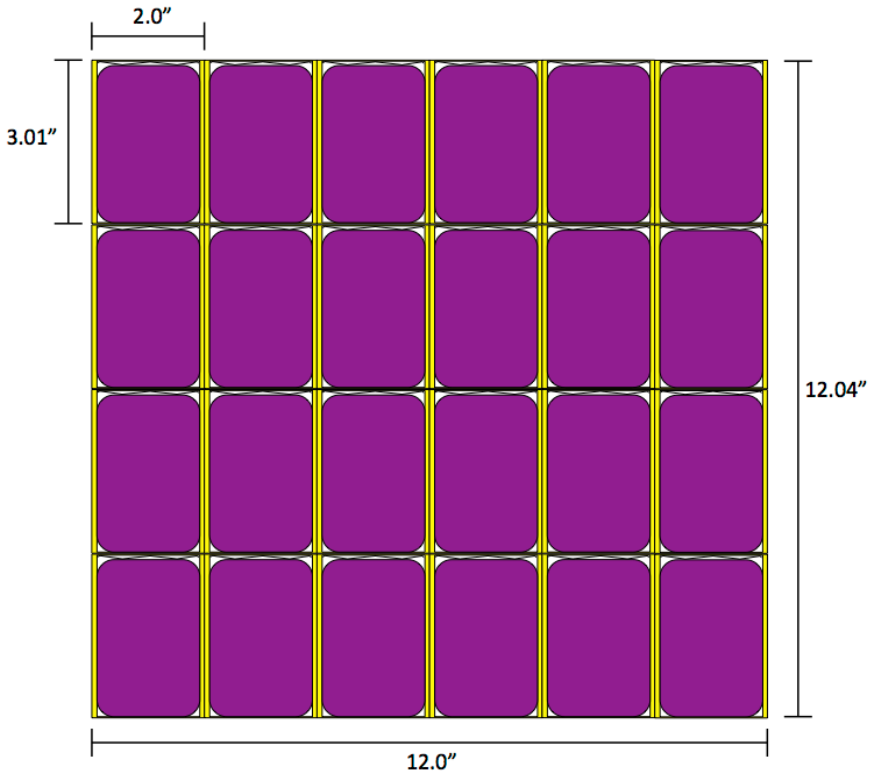

Trays Used to Facilitate Stacking Layers

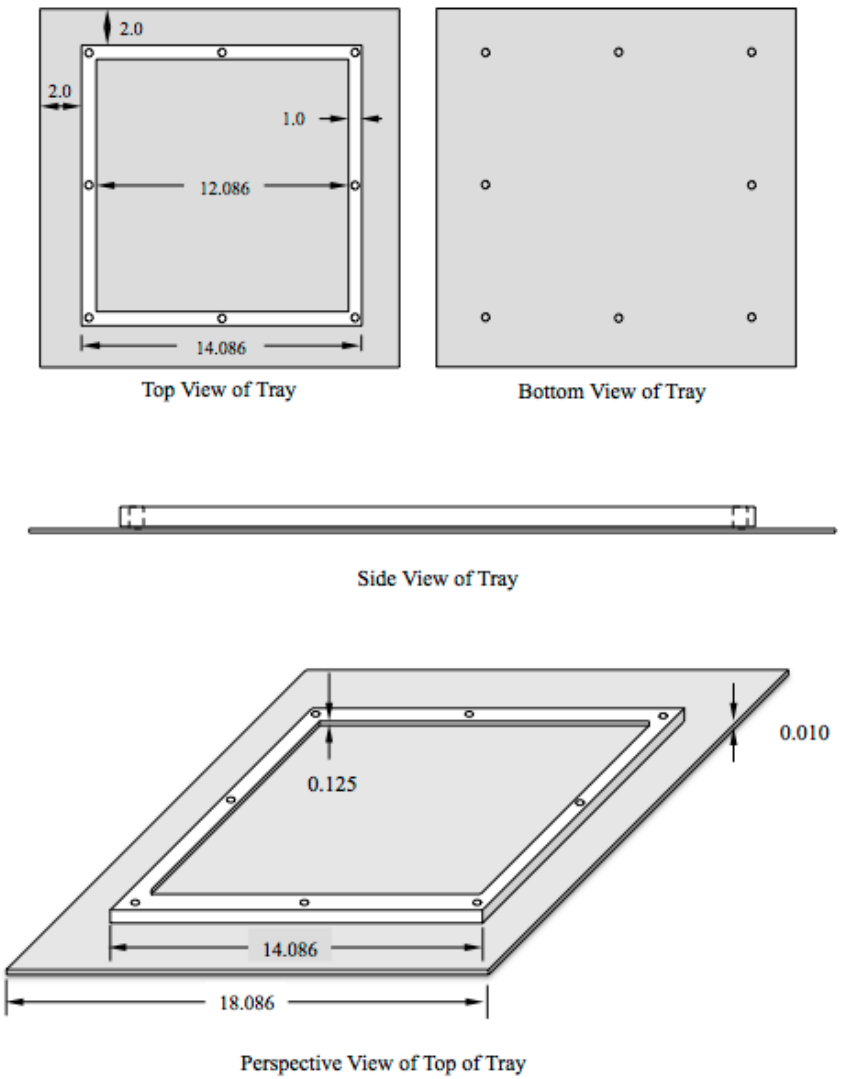

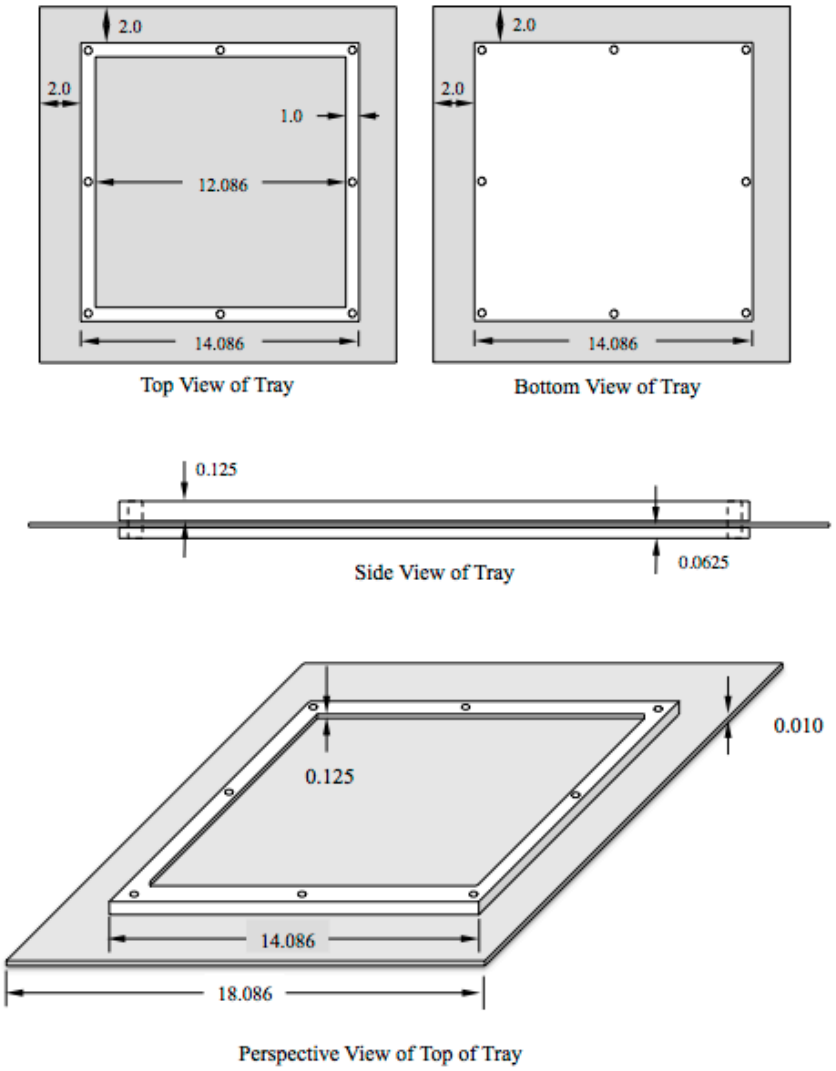

Plutonium Baseline Experiments

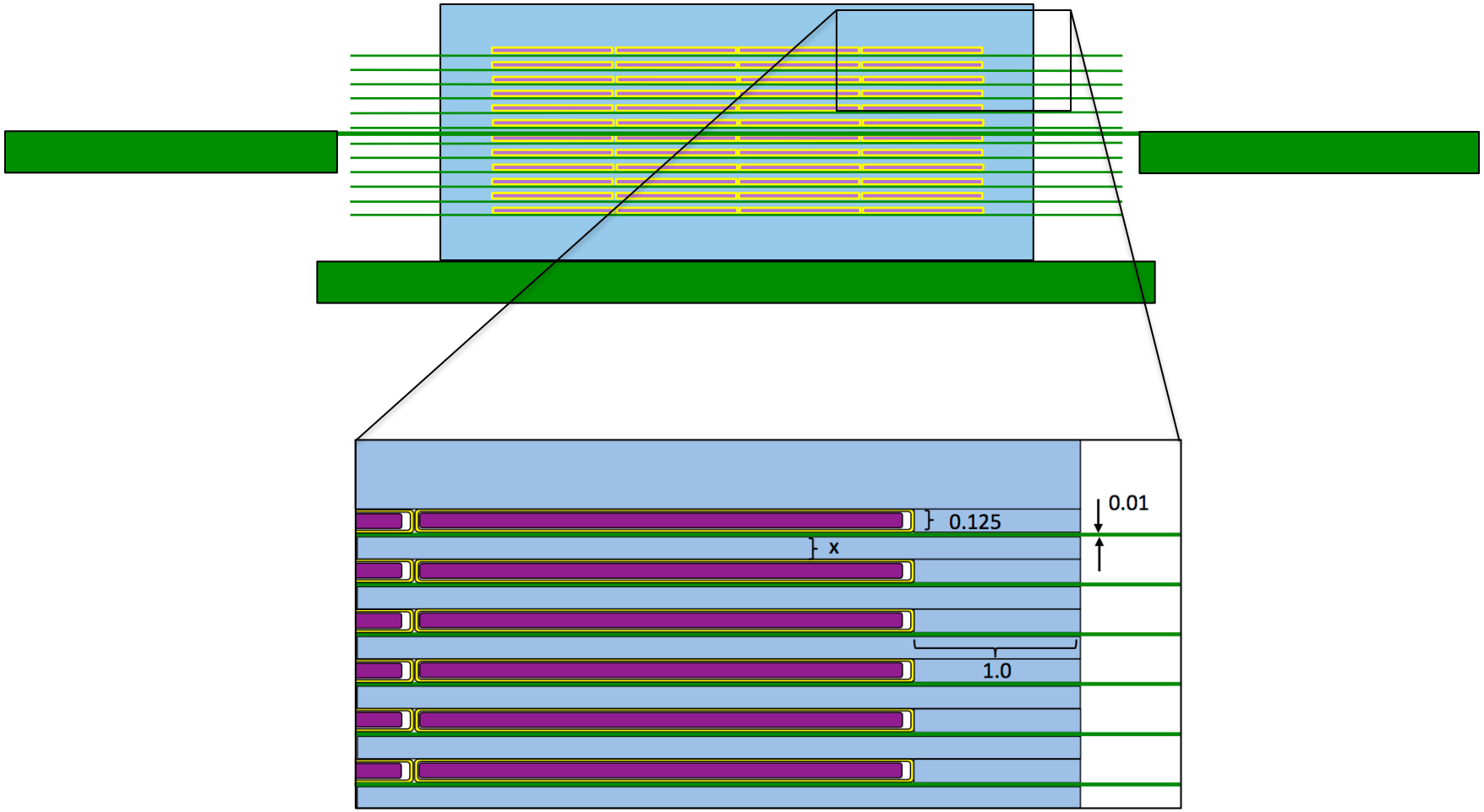

Five Baseline Experiments

- Vary polyethylene thickness between the plutonium layers (“x” dimension in previous slide)
  - Experiment 1: 0” PE
  - Experiment 2: 1/16” PE
  - Experiment 3: 3/16” PE
  - Experiment 4: 7/16” PE
  - Experiment 5: 1” PE

Baseline Experiment Characteristics

Thickness of PE Plates (in)	Critical Mass (kg ^{239}Pu)	Number of Pu Layers	Number of ZPPR Plates	Stack Height (cm)	Thermal Fission Fraction (<0.625 eV)	Intermediate Fission Fraction (0.625 eV-100 KeV)	Fast Fission Fraction (>100 KeV)
0 (no PE)	49.8	21	504	12.5	0.09	0.17	0.74
1/16	40.3	17	408	13.5	0.14	0.38	0.49
3/16	28.5	12	288	12.0	0.27	0.43	0.30
7/16	19.0	8	192	15.9	0.48	0.33	0.19
1	14.2	6	144	20.5	0.67	0.21	0.12

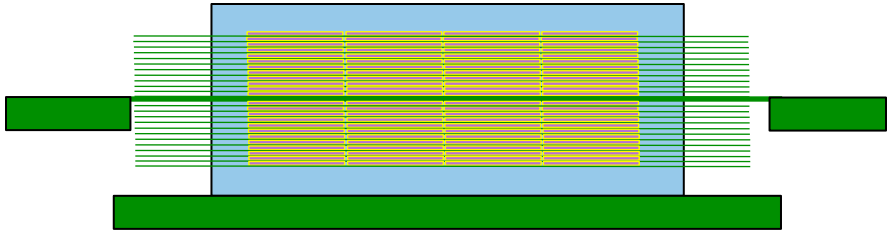

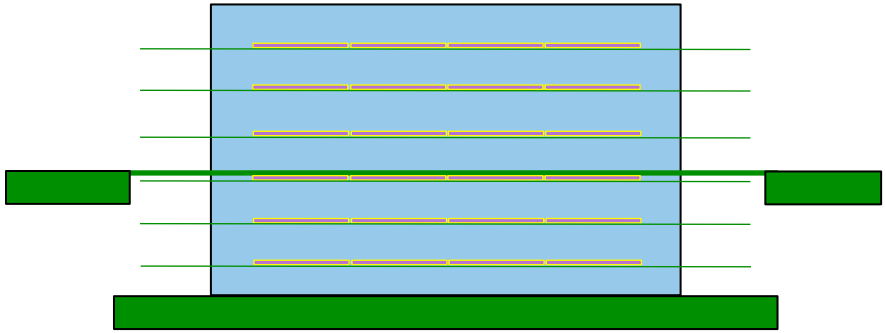

Tantalum Diluted Cases

- As part of the ZPPR inventory, ANL had approximately 15,000 very pure tantalum plates
- Nominal outer dimensions of 2” x 3” by 1/16”
- Additional trays will be manufactured to accommodate both Pu/Al and Ta plates
  - 3/16” tray depth

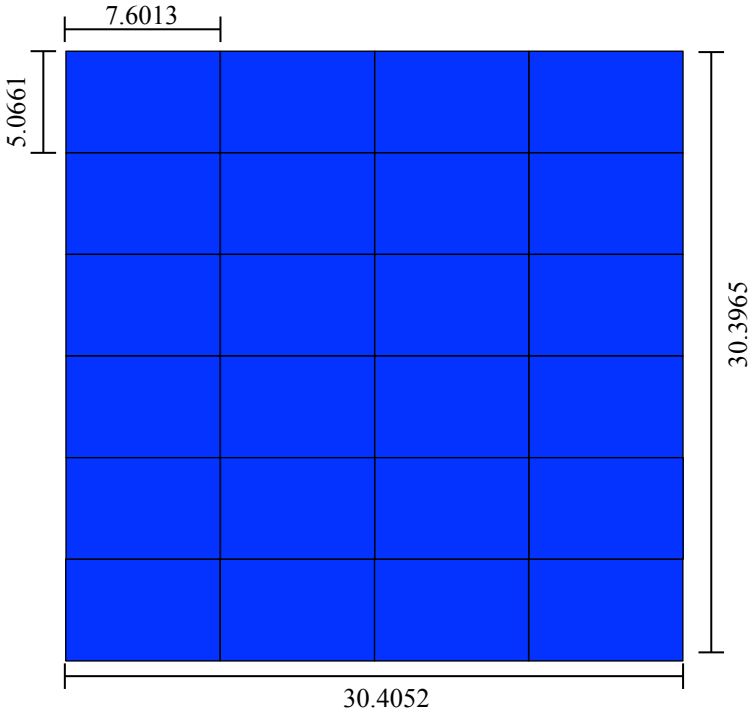

Tantalum Diluent Experiments

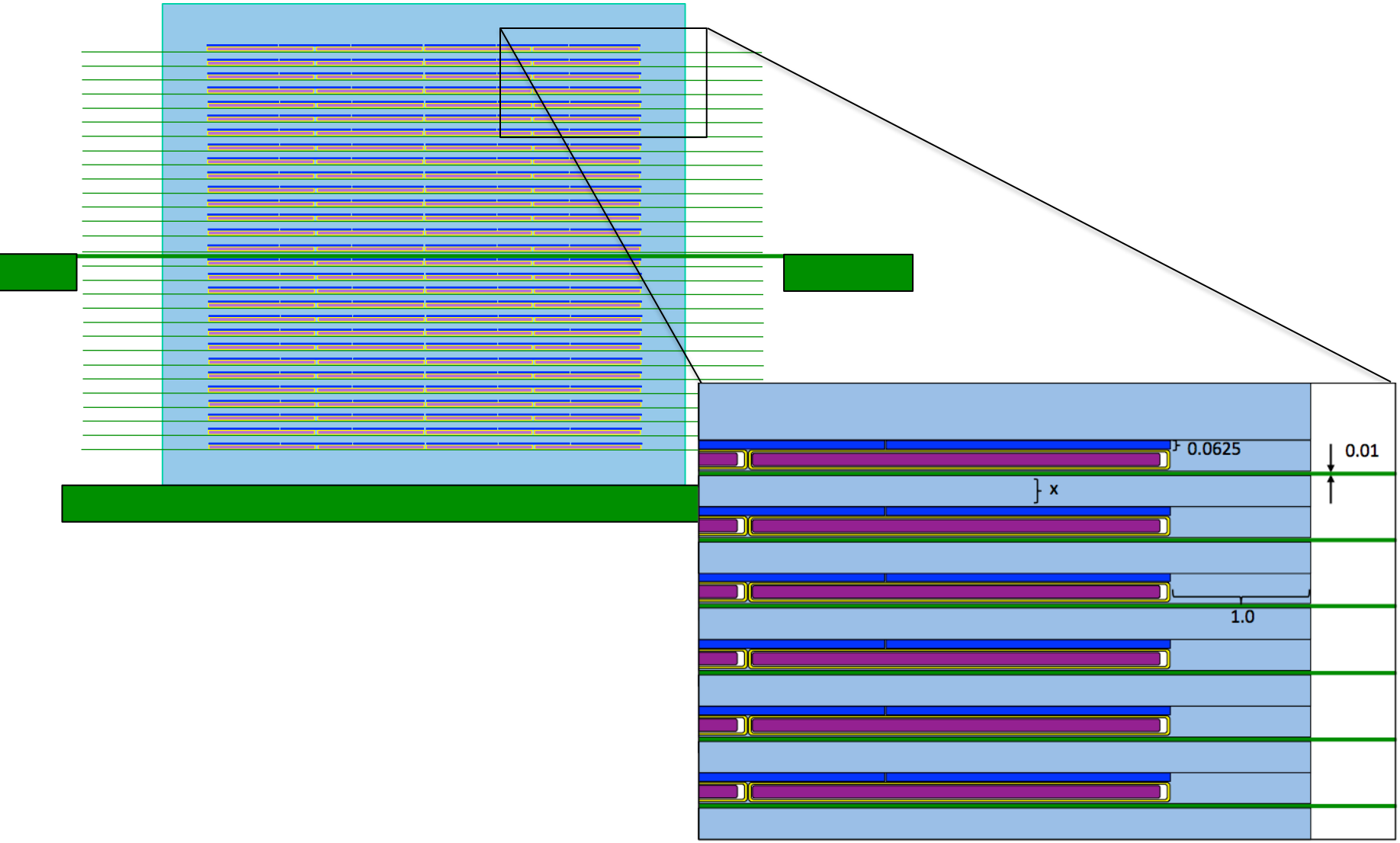

Tantalum Experiment Characteristics

Thickness of PE Plates (in)	Critical Mass (kg ^{239}Pu)	Number of Pu Layers	Number of ZPPR Plates	Stack Height (cm)	Thermal Fission Fraction (<0.625 eV)	Intermediate Fission Fraction (0.625 eV-100 KeV)	Fast Fission Fraction (>100 KeV)
0 (no PE)	61.7	26	624	13.0	0.07	0.14	0.79
1/16	71.2	30	720	19.6	0.8	0.36	0.56
3/16	68.8	29	696	29.3	0.19	0.45	0.36
7/16	42.7	18	432	33.1	0.43	0.36	0.21
1	28.5	12	288	36.3	0.64	0.22	0.14

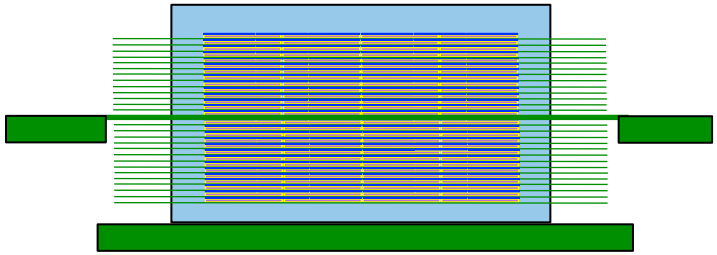

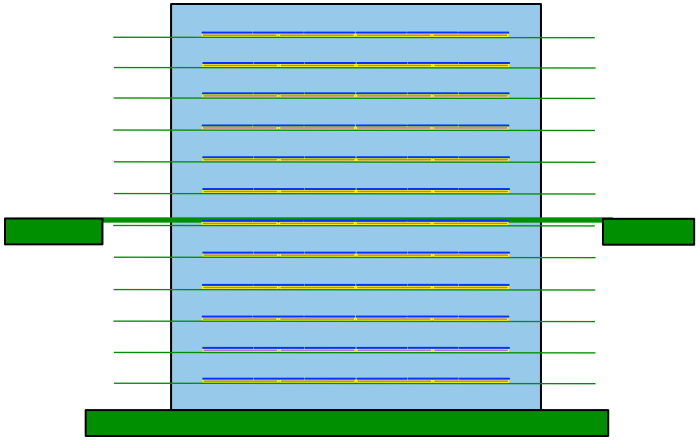

Uncertainty and Bias Calculations

- Uncertainties were estimated to be on the order of 0.0026
  - Mass and geometry uncertainties from the ZPPR plates were very low due to the strict procurement specifications from ANL
  - Larger uncertainties due to educated guesses about PE part tolerance
    - Can be mitigated by procurement specs and measurements
  - Experiment shown to be sensitive to stack gaps
    - Mitigate by measurements during experiment

- Biases were estimated at 0.00057
  - Fuel impurities are overestimated, based on worst case impurity (carbon) and maximum impurity level per plate
  - Room return bias was found to be 0.00017 with 1” PE reflection
  - With 15 degree temperature difference, bias introduced was 0.00016

Heat Load Calculations

- Tens of kg quantities of Plutonium plates required for TEX configurations produce lots of heat

Isotope	Mass per ZPPR Plate (g)	Specific Power (mW/g)[14]	Heat Source (mW)
^{239}Pu	98.87	1.9288	190.700456
^{240}Pu	4.697	7.0824	33.2660328
^{241}Pu	0.0032	3.412	0.0109184
^{242}Pu	0.0049	0.1159	0.00056791
^{241}Am	0.4021	114.2	45.91982
Total	**103.9772**		**269.8977951**

- Heat load calculations were completed to ensure temperatures would not impact the polyethylene moderators (maximum long-term service life temperature of 80 °C)

Heat Load Calculations

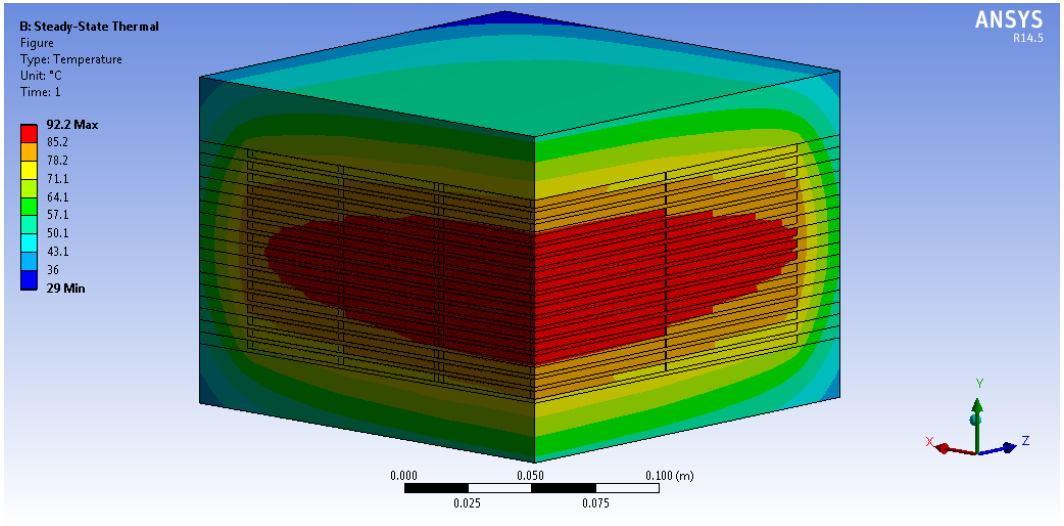

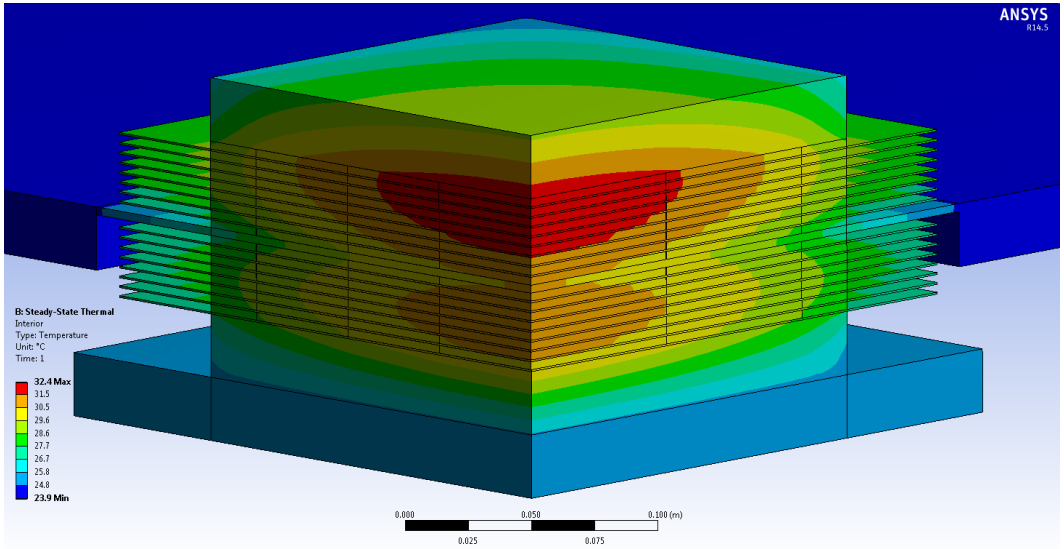

- ANSYS 14.5.0 Finite Element Analysis Software used to model TEX configurations with PE moderation
  - With 0.01” aluminum heat dispersal plates (“fins”)
  - Without 0.01” aluminum heat dispersal plates

Heat Load Results

Experiment Modeled	HDPE Thickness (in)	Pu Layers	T_{max} Without Fins (°C)	T_{max} With Fins (°C)
1	0	21	32.6	
2	1/16	17	52.6	36.3
3	3/16	12	44.9	34.6
4	7/16	8	39.1	32.7
5	1	6	36.6	31.8

- T_{max} without fins 52.6°C
- Maximum long-term service temperature of HDPE is approximately 80 °C
- Fins likely not required to keep temperature below polyethylene impact temperature
- However, fins help normalize temperature over entire stack and over the five different experiments

Current Work (FY2015) for TEX

- CED-3a initiated as of March 1, 2015
- Procurements in progress
- First experiments to be scheduled later this year