Sensitivity Profiles for New FY12 NCSP Sponsored ICSBEP Evaluations

Thomas M Miller

Bruce Patton

Reactor & Nuclear Systems Division

Oak Ridge National Laboratory

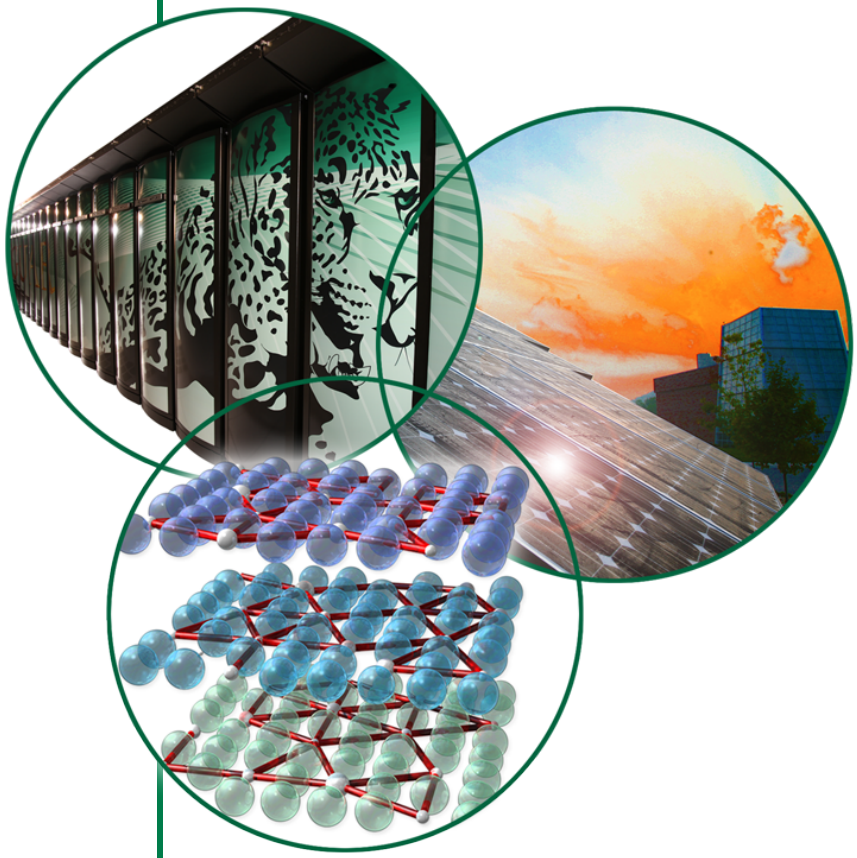

U.S. DEPARTMENT OF ENERGY

OAK RIDGE NATIONAL LABORATORY

MANAGED BY UT-BATTELLE FOR THE DEPARTMENT OF ENERGY

Outline

- Brief review of DICE (location of sensitivity profiles available from ICSBEP)
- Brief review of VALID procedure for QA of models and subsequent sensitivity profiles
- Review of new FY12 NCSP sponsored ICSBEP evaluations
- Summary and recommendations

DICE

- **D**atabase for the **I**nternational Handbook of Evaluated **C**riticality Safety Benchmark **E**xperiments
- DICE allows simple or complex searches on specific data & parameters of experimental benchmarks with the ICSBEP Handbook
- DICE is distributed on the OECD NEA ICSBEP Handbook DVD
- DICE can be downloaded from the NCSP ICSBEP website (current link for the FY12 version)
  - http://ncsp.llnl.gov/ICSBEP/handbook/Dice2012.zip

Location of Input Files & Sensitivity Data within NCSP DICE

- Inputs
  - /Dice/data/ornl/inputs/csas5
  - /Dice/data/ornl/inputs/csas6
  - /Dice/data/ornl/inputs/tsunami-3d-k5
  - /Dice/data/ornl/inputs/tsunami-3d-k6
- Sensitivity data files
  - /Dice/data/ornl/TSUNAMI-1D
  - /Dice/data/ornl/TSUNAMI-3D

VALID

- **V**erified, **A**rchived **L**ibrary of **I**nputs & **D**ata
- Quality assurance procedure for the generation of radiation transport code inputs and output data
  - An originator creates/provides the inputs and data
  - All are independently reviewed, which can result in refinement/correction of the input and data or even the ICSBEP evaluation
  - Inputs & data are added to VALID after approval of the Quality Assurance Coordinator (currently BJ Marshal, ORNL)
- All new FY12 inputs and sensitivity profiles in DICE followed the VALID QA procedure

New FY12 NCSP Sponsored Evaluations with Sensitivity Profiles

- HEU-MET-FAST-086
- HEU-MET-FAST-092
- MIX-COMP-FAST-005
- MIX-COMP-FAST-006
- LEU-COMP-THERM-080

HEU-MET-FAST-086

- GODIVA-IV delayed-critical experiments & description of an associated prompt-burst experiment

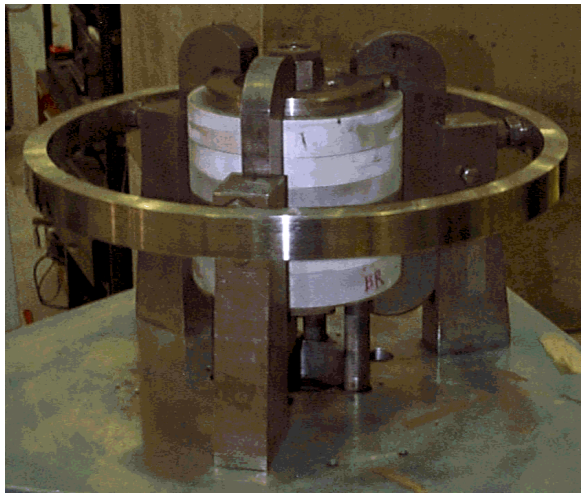

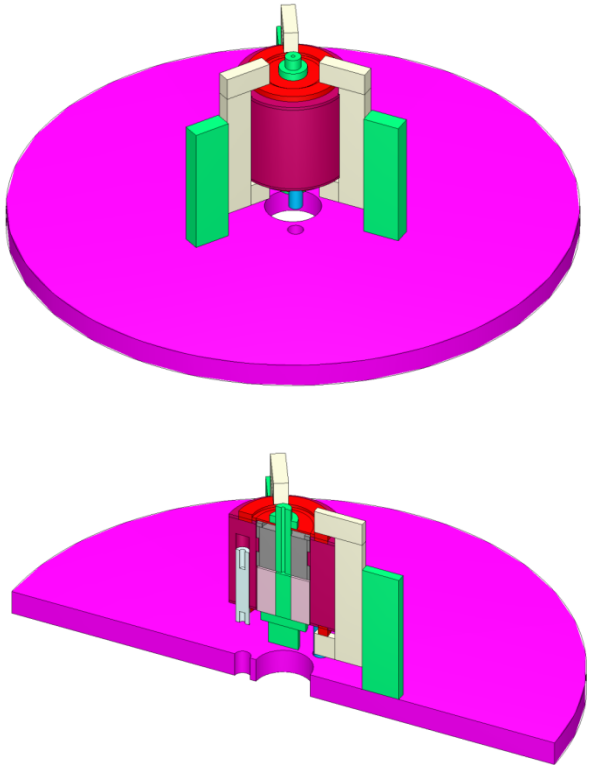

HEU-MET-FAST-086

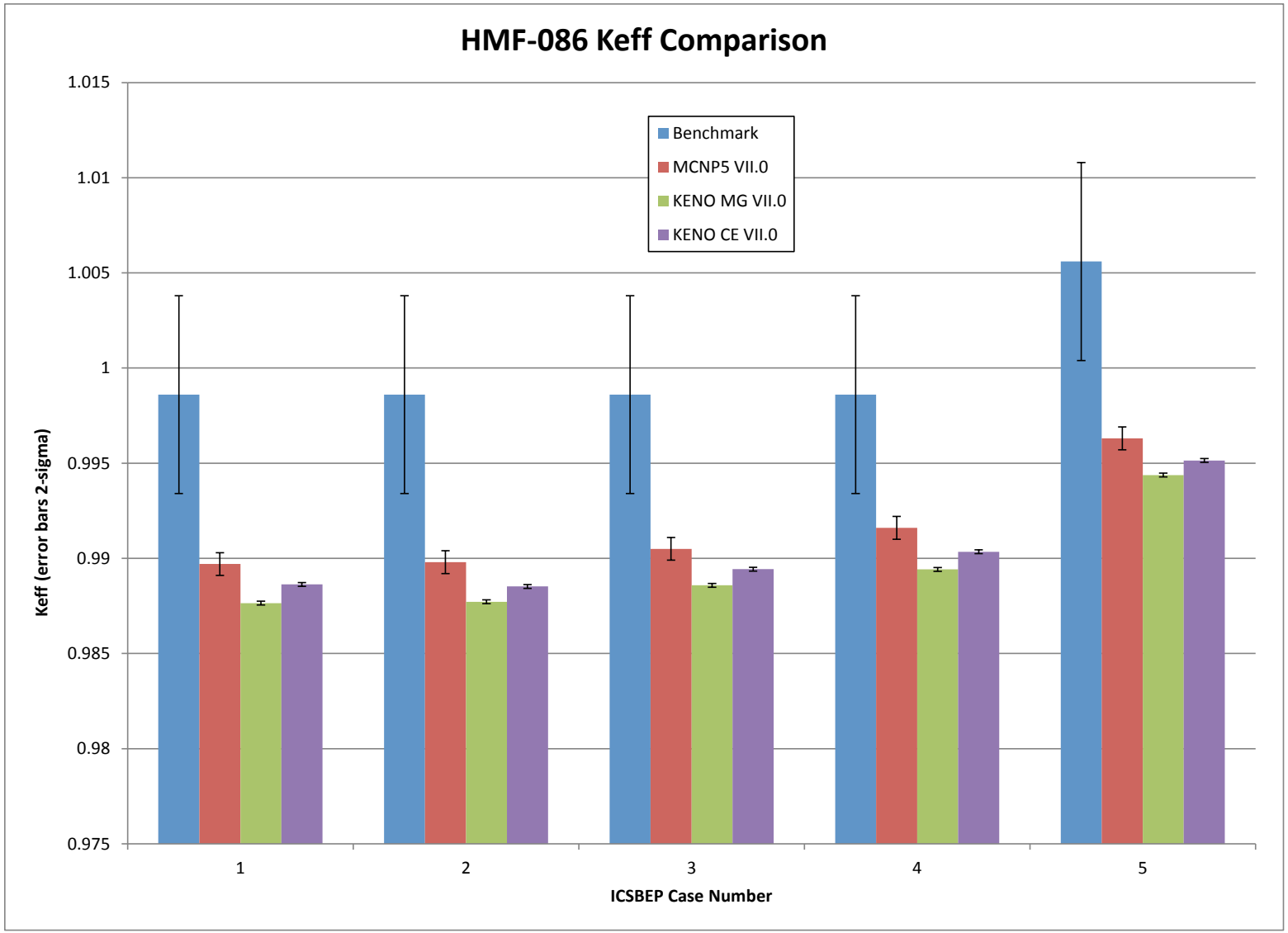

HEU-MET-FAST-086

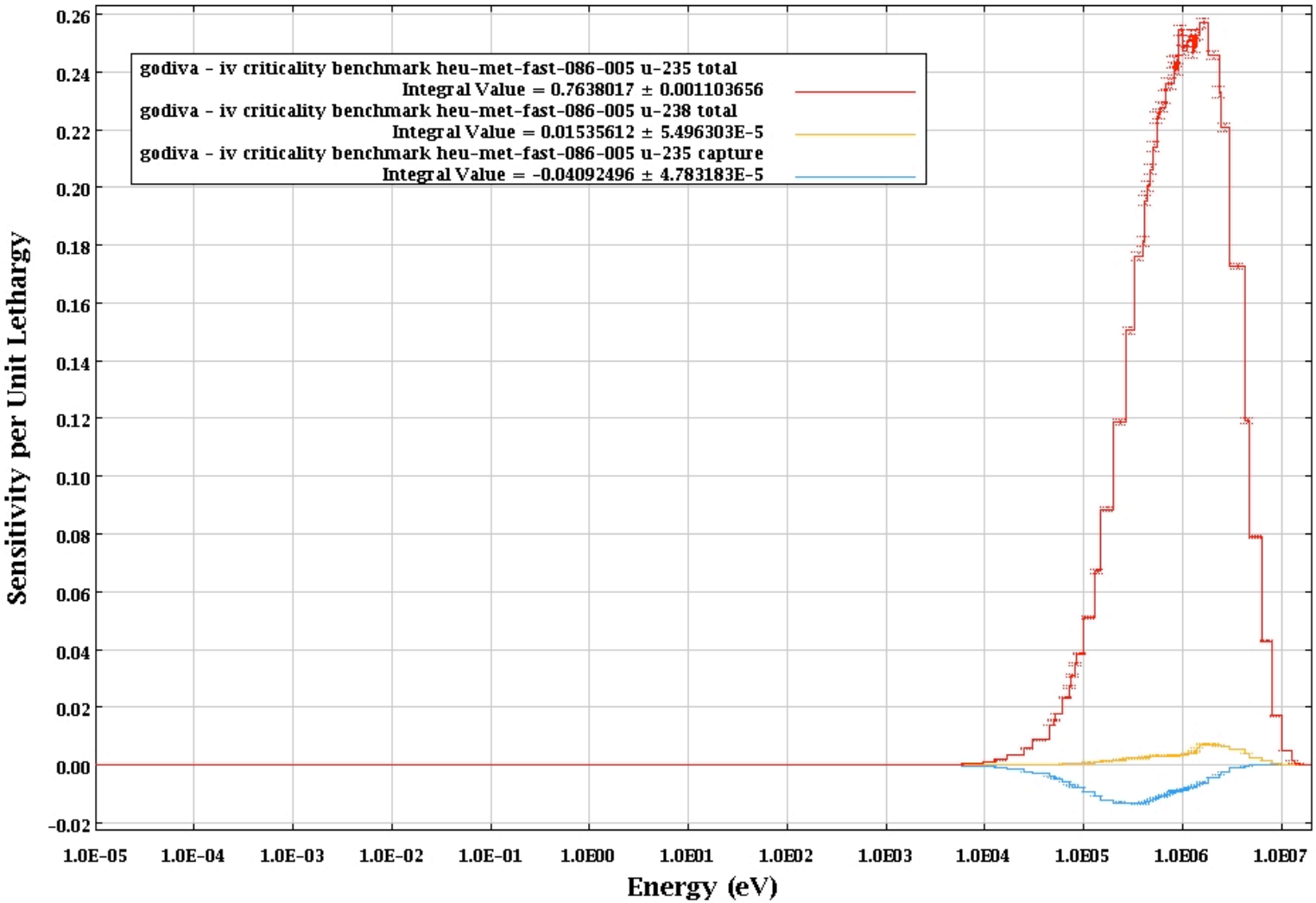

HEU-MET-FAST-092

- Four molybdenum-reflected HEU cylinders

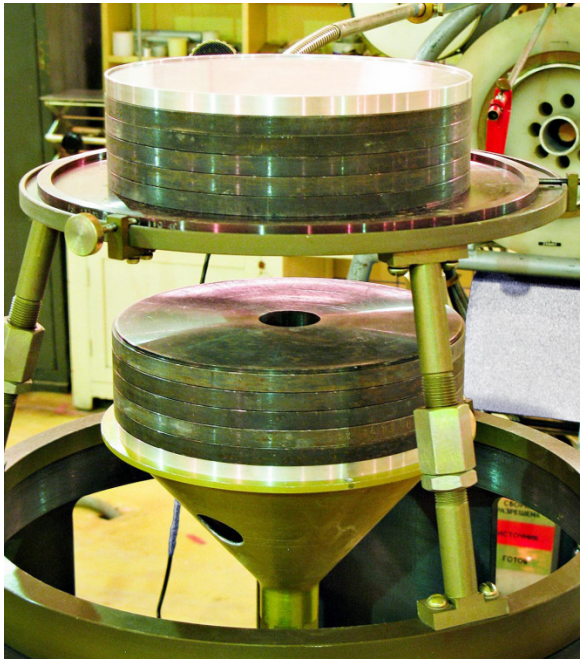

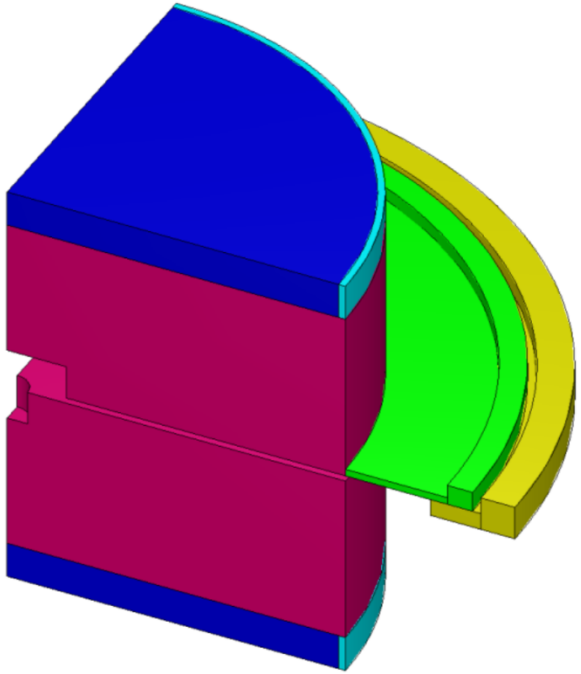

HEU-MET-FAST-092

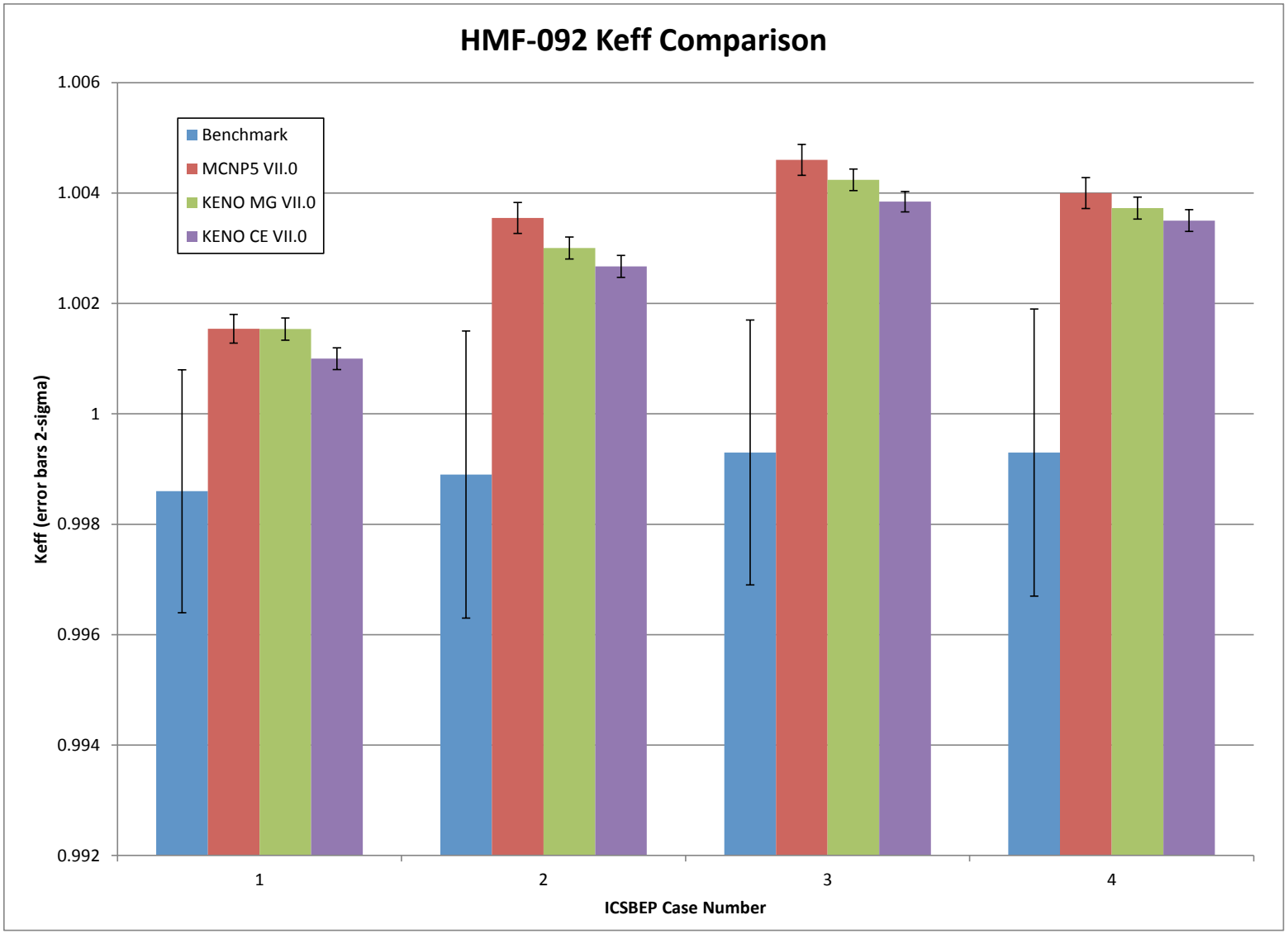

HEU-MET-FAST-092

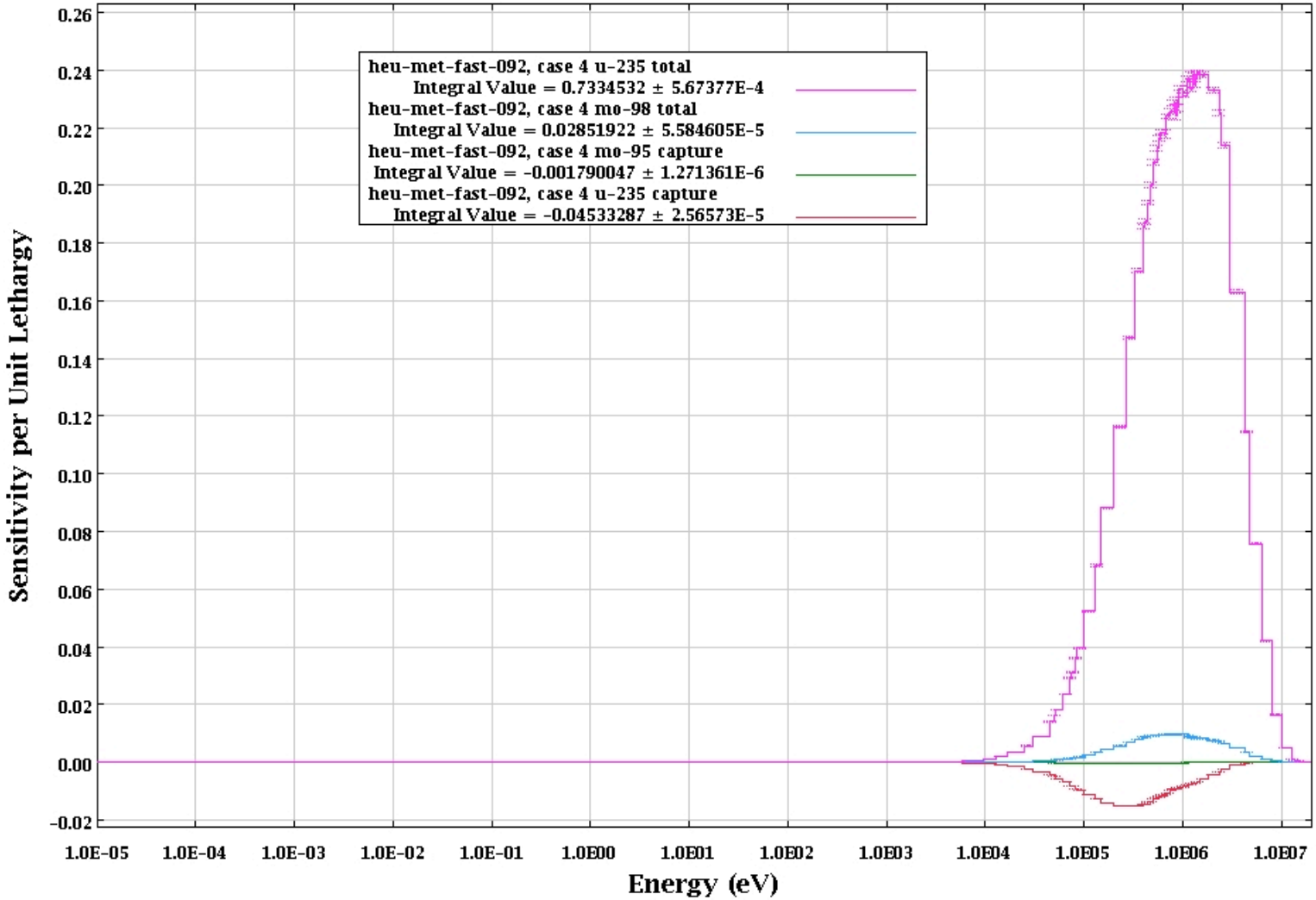

Comments on HMF-086 & -092

- The 2 systems are very similar
  - Keff: the simulations are fairly consistent
    - However, HMF-086 underestimates & HMF-092 overestimates the experiment
  - Sensitivity: both dominated at fission neutron energies
    - HMF-092 does show a small (relative to U) sensitivity to Mo

MIX-COMP-FAST-005

- ZPR-9 assembly 31: a cylindrical assembly with mixed (Pu,U)-carbide fuel and depleted uranium carbide blanket

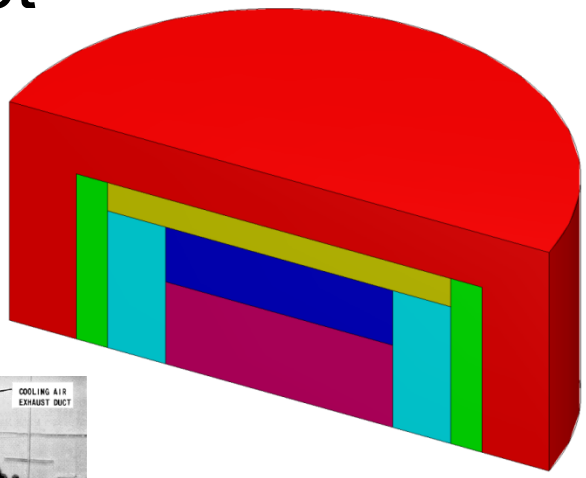

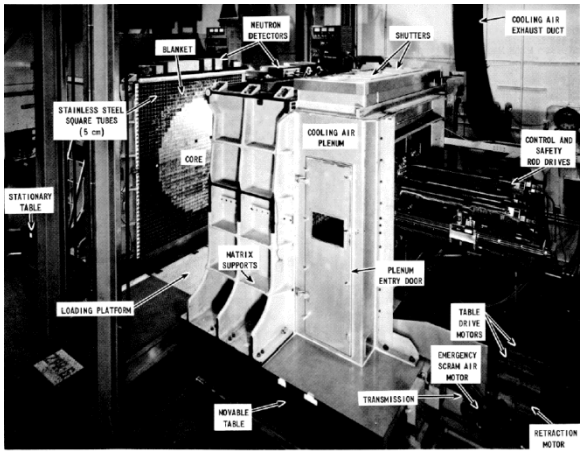

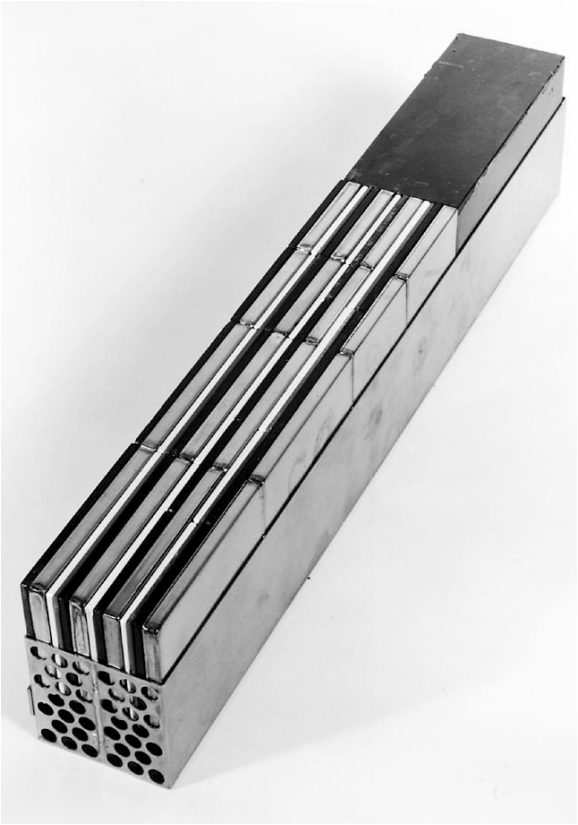

MIX-COMP-FAST-006

- ZPPR-2: a cylindrical assembly with mixed (Pu,U)-oxide fuel and sodium reflected by DU, sodium, and steel

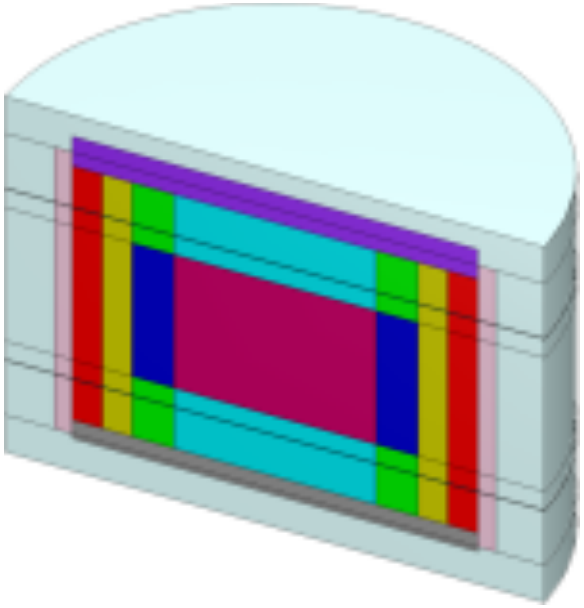

MIX-COMP-FAST-005 & -006

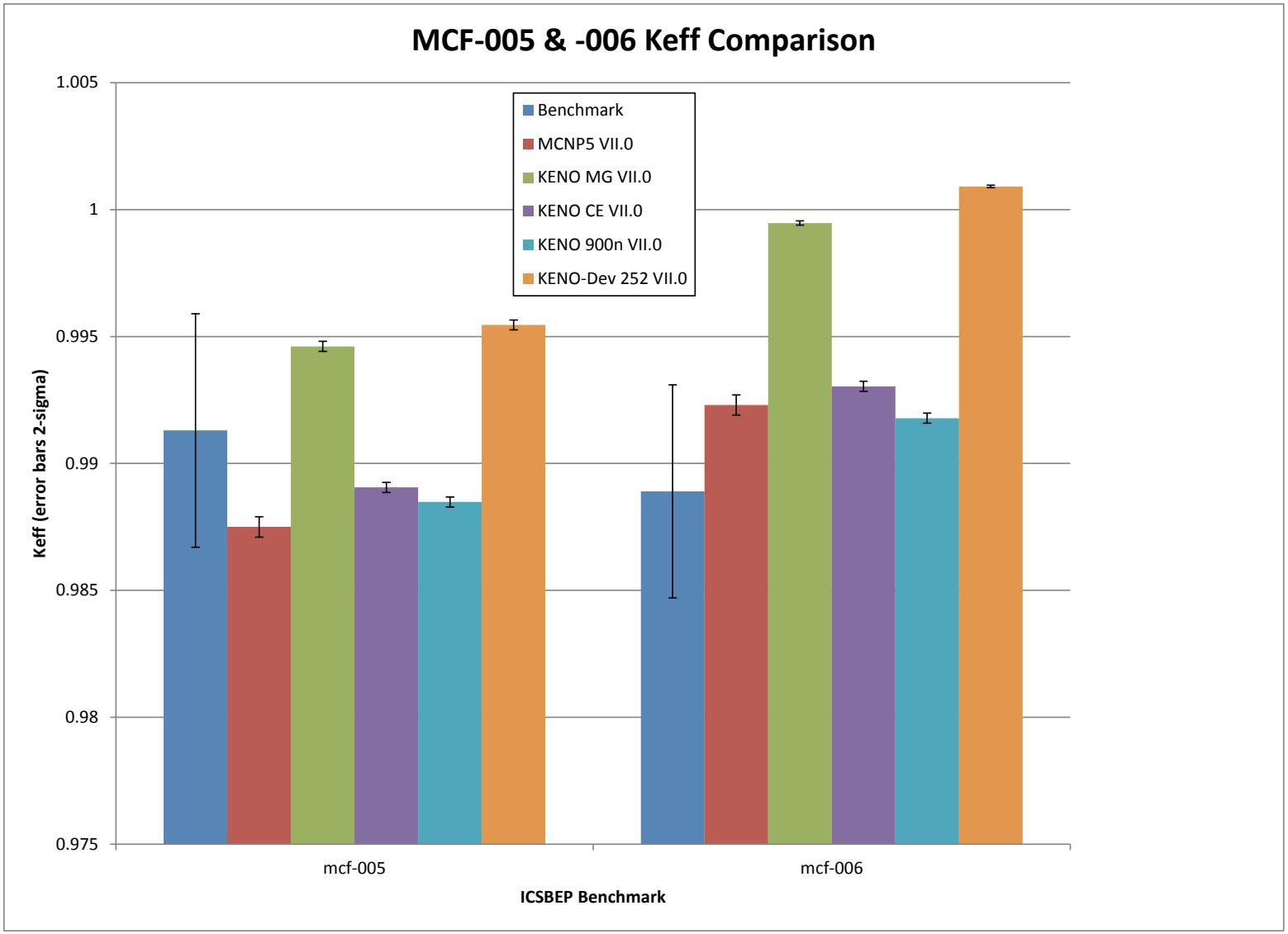

MIX-COMP-FAST-006

(MIX COMP-FAST-005 is almost identical)

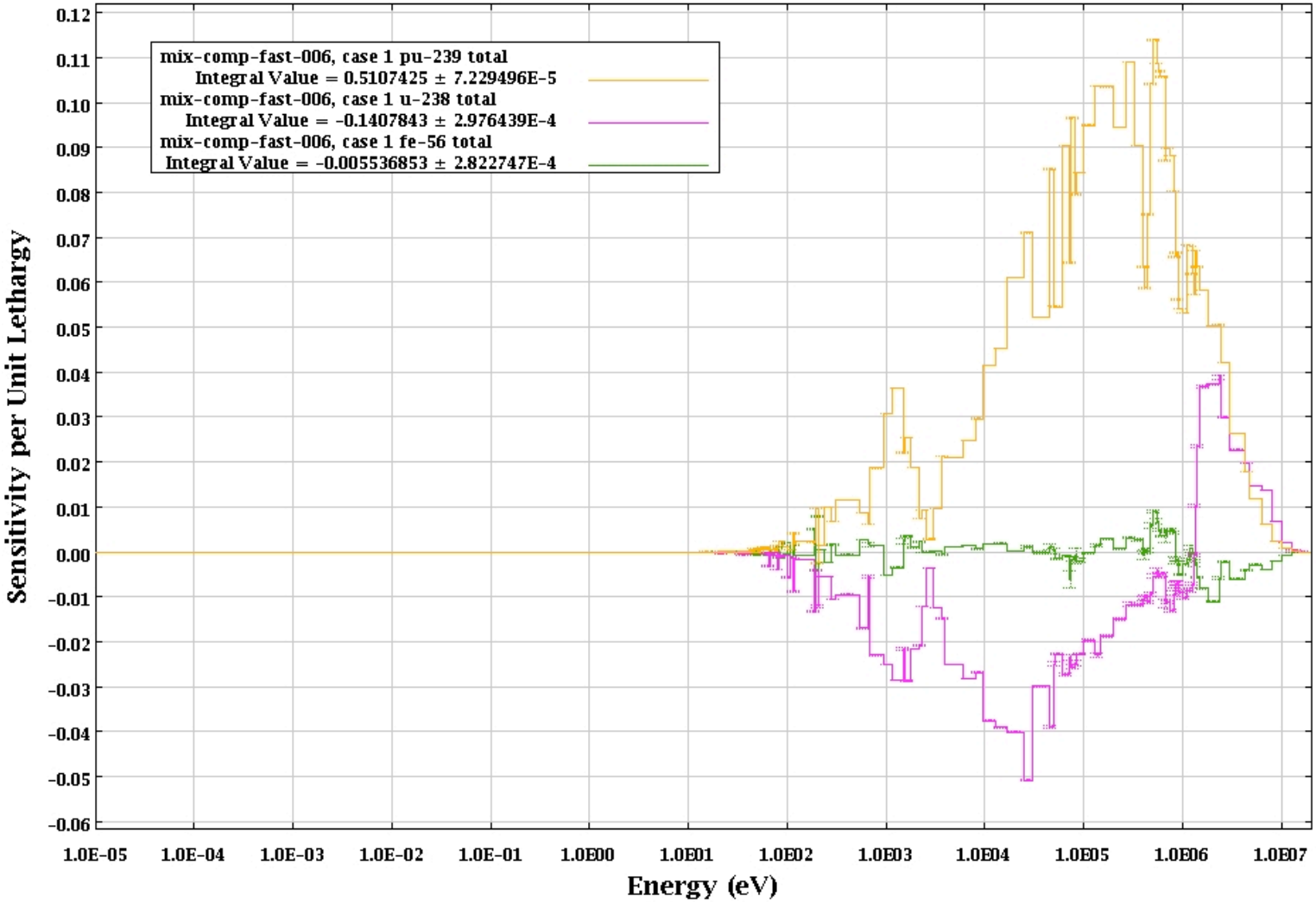

Comments on MCF-005 & -006

- Obviously, these 2 systems are very similar
  - Keff: the simulations are all consistent (excluding MG & 252 VII.0)
    - Compared to the experiment and amongst themselves
    - The sensitivity profiles should be regenerated with a library that has a finer group structure at high energies
  - Sensitivity: both dominated at higher energies, but not just at fission neutron energies
    - MCF-006 does show a small (relative to Pu) sensitivity to Fe

LEU-COMP-THERM-080

- Water-moderated square-pitched $U(6.90)O_2$ fuel rod lattices with 0.67 fuel to water volume ratio

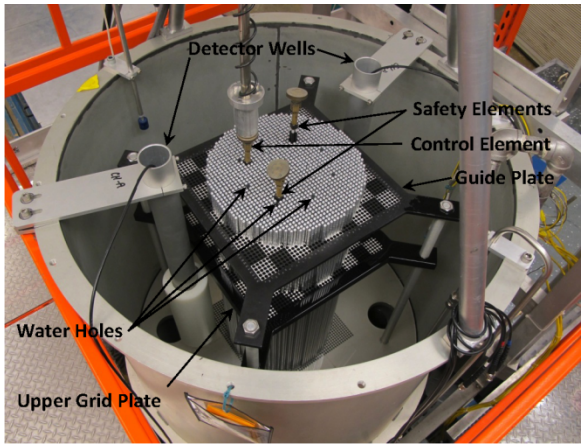

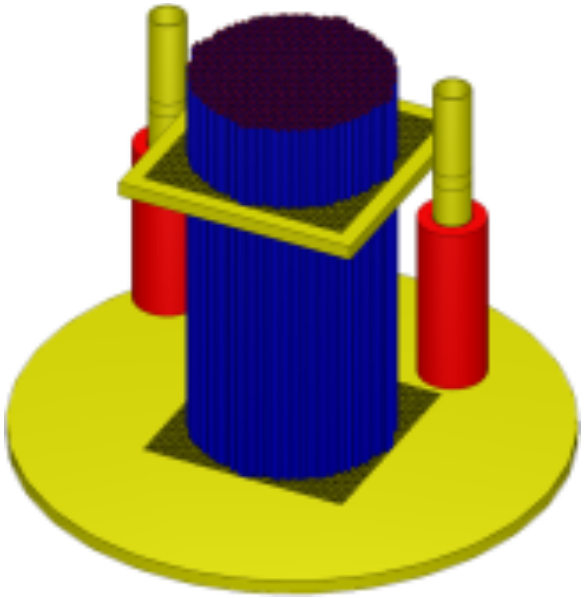

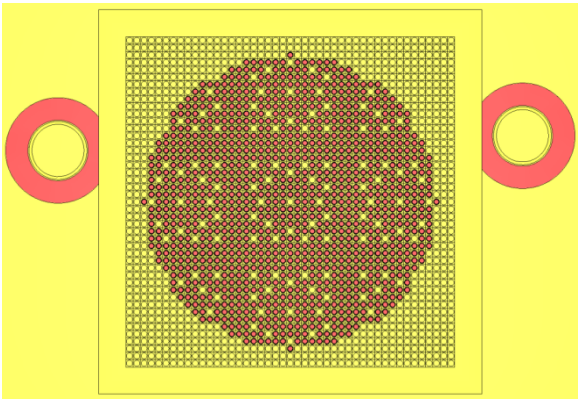

LEU-COMP-THERM-080

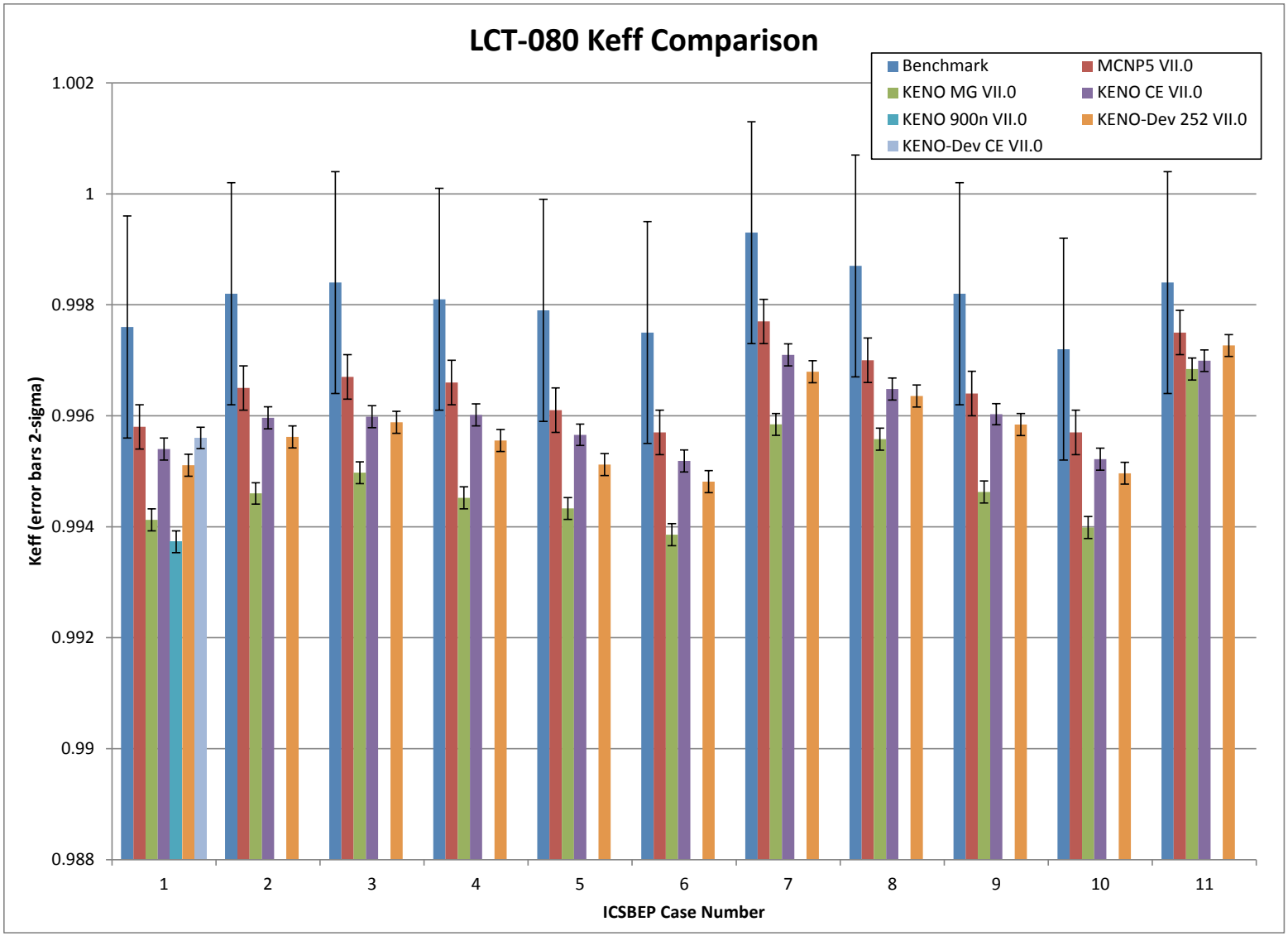

LEU-COMP-THERM-080

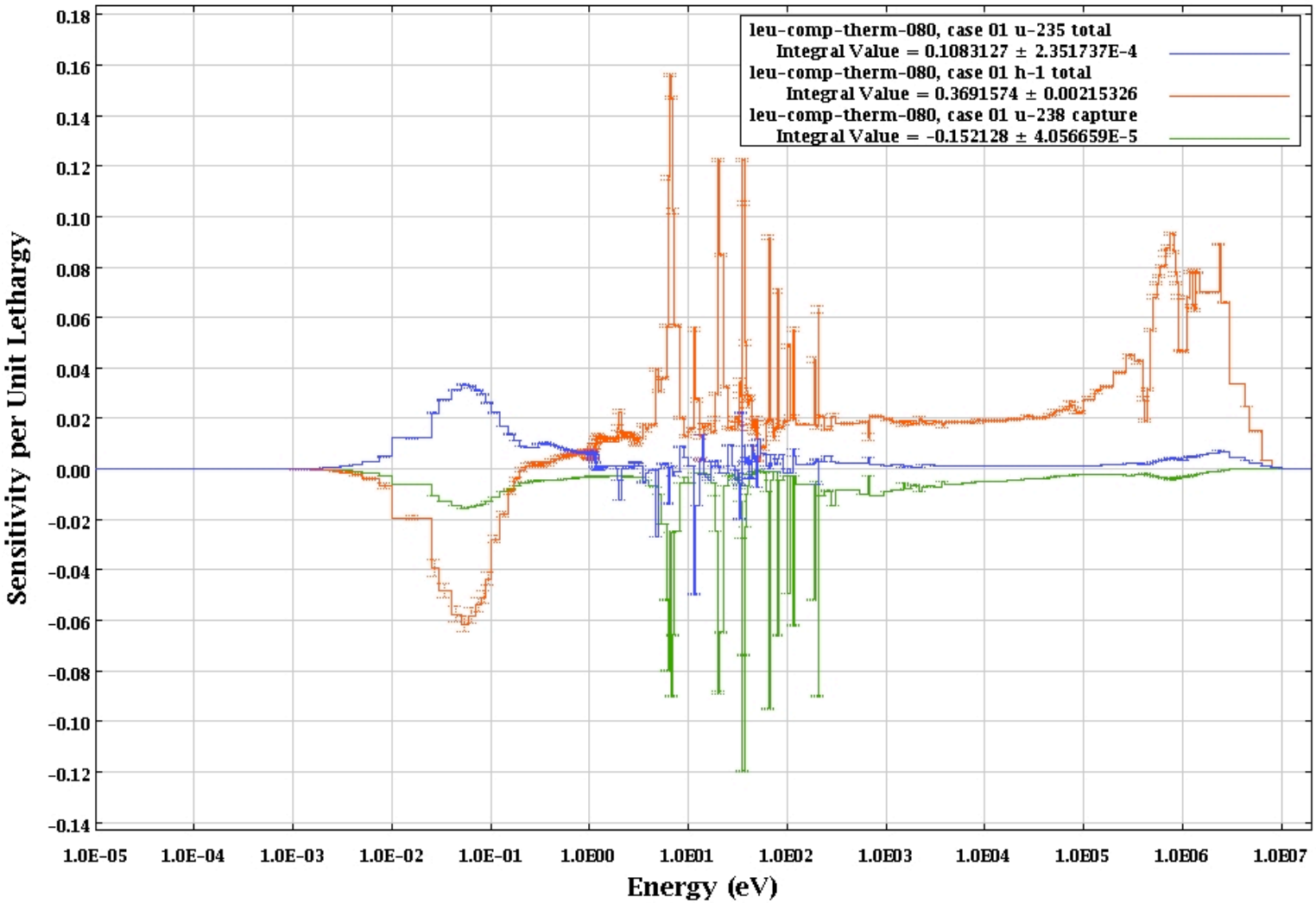

Comments on LCT-080

- Keff: the simulations are fairly consistent (excluding MG VII.0)
  - Compared amongst themselves – very consistent
  - Compared to the benchmark – slight underestimate
  - The new SCALE 252 group library (new group structure and spectrum for collapse), improved BONAMI resonance treatment, and increased upscatter energy limit (5 eV) clearly improved SCALE's MG consistency
- Sensitivity: profile looks as expected
  - U sensitivity at thermal energies
  - H sensitivity at all energies, positive at fission neutron energies & negative at thermal energies

Summary and Recommendations

- The 5 benchmarks discussed have input files and sensitivity profiles available to the public in DICE 2012
- The input files and sensitivity profiles were generated via the VALID QA procedure
- The sensitivity profiles for MCF-005 & -006 should be regenerated using a library with finer group structure at high energies
- The sensitivity profiles for LCT-080 should be regenerated using the new 252 group cross section library
  - Improvements to the upscatter data and a new spectrum to collapse CE data to the new 252 group structure are primarily responsible for the improved results
- Recommend performing cross-section adjustments with TSURFER using all the VALID / DICE sensitivity profiles to improve consistency between the simulations and experiments
  - The results of these adjustments could point out cross sections that need attention to the evaluators and experimentalist