PRC-NS-00028
Revision 0

Hanford IP&D Subtask 3: Actinide Cross-Section Extraction Status Report

Prepared for the U.S. Department of Energy
Assistant Secretary for Environmental Management

Contractor for the U.S. Department of Energy
under Contract DE-AC06-08RL14788

CH2MHILL
Plateau Remediation Company

P.O. Box 1600
Richland, Washington 99352

Approved for Public Release;
Further Dissemination Unlimited

PRC-NS-00028
Revision 0

Hanford IP&D Subtask 3: Actinide Cross-Section Extraction Status Report

Document Type: RPT

R. J. Puigh
CH2M HILL Plateau Remediation Company

H. Toffer
TRS

Date Published
October 2011

Prepared for the U.S. Department of Energy
Assistant Secretary for Environmental Management

Contractor for the U.S. Department of Energy
under Contract DE-AC06-08RL14788

CH2MHILL
Plateau Remediation Company

P.O. Box 1600
Richland, Washington

R. D. Aardal 10/26/2011
Release Approval Date

Approved for Public Release;
Further Dissemination Unlimited

TRADEMARK DISCLAIMER

Reference herein to any specific commercial product, process, or service by trade name, trademark, manufacturer, or otherwise, does not necessarily constitute or imply its endorsement, recommendation, or favoring by the United States Government or any agency thereof or its contractors or subcontractors.

This report has been reproduced from the best available copy.

Printed in the United States of America

Hanford IP&D Subtask 3
Actinide Cross-Section Extraction Status Report

Prepared by: H. Toffer and R. J. Puigh

for

CH2M HILL Plateau Remediation Company
Richland, Washington

October 2011

This page is intentionally left blank.

TABLE OF CONTENTS

1.0 INTRODUCTION 1
2.0 HANFORD REACTORS 1
2.1 HANFORD REACTORS 1
2.2 RELEVANT REACTOR FEATURES 6
2.3 FUEL CYCLE 6
2.4 EVOLUTION OF HANFORD REACTOR MISSION 6
3.0 TOPICS FOR CROSS-SECTION EXTRACTION 11
3.1 BACKGROUND 11
3.2 DATA HANDLING 11
3.3 HANDS ON APPROACH (HOA) 17
3.4 MODEL OF ISOTOPE BUILDUP/DEPLETION FOR NUMERICAL ANALYSIS 17
3.4.1 Overview of Mathematical Analysis 17
3.5 DESCRIPTION OF MATHEMATICAL MODEL 22
3.6 EQUATION APPROACH FOR SOLUTIONS 22
4.0 COMPUTER APPROACH TO EXTRACTION OF EFFECTIVE CROSS-SECTIONS 24
4.1 INTRODUCTION TO PTABLE2 24
4.2 PTABLE2 STRUCTURE 24
5.0 EXECUTIVE SUMMARY 28
6.0 FUTURE WORK 28
7.0 REFERENCES 29

LIST OF FIGURES

FIGURE 1. OPERATING HISTORY OF THE NINE HANFORD PRODUCTION REACTORS 2
FIGURE 2. FRONT FACE OF HANFORD K REACTOR 3
FIGURE 3. FUEL DIMENSIONS OF HANFORD REACTOR FUEL 4
FIGURE 4. FRONT FACE OF HANFORD N REACTOR 4
FIGURE 5. TYPICAL PRODUCTION REACTOR FUEL ELEMENTS 7
FIGURE 6. FUEL CYCLE FOR HANFORD REACTOR 8
FIGURE 7. PRODUCTION MISSION AT HANFORD 9

FIGURE 8. LOCATION FOR VARIOUS TESTS IN THE B REACTOR 14
FIGURE 9. INITIAL ISOTOPIC BUILDUP/DEPLETION MODEL 18
FIGURE 10. SIMPLIFIED ISOTOPIC BUILDUP/DEPLETION MODEL 19
FIGURE 11. SIMPLIFIED ISOTOPIC BUILDUP/DEPLETION MODEL 20
FIGURE 12. INITIAL MODEL TRANSMUTATION EQUATIONS 21

LIST OF TABLES

TABLE 1. REACTOR CORE CHARACTERISTICS FOR HANFORD PRODUCTION REACTORS 10
TABLE 2. SELECTED PROCESS TEST EXPERIMENTS PROVIDING CROSS SECTION DATA FOR THE U-PU TREE 15
TABLE 3. FUEL ELEMENT DIMENSIONS 16

1.0 INTRODUCTION

Previous quarterly reports (CHPRC-NS-10-001 and CHPRC-01335) described the evolution of the Hanford Production Reactors and production improvement to meet the demands of the national objective. Furthermore, the information generated during the development and successful operation of the Hanford reactors was pertinent at the time and has potential application currently. Abundant radio-chemical data obtained in the past can have some direct use for actinides in burn-up analysis application. Sensitivities observed with multiple radio-chemical data could serve as validation points to improve prediction of burn-up credit and possibly extracting benchmarks for graphite moderated reactors for isotopic transmutation.

Measurements in the Single Pass Reactors (SPR) were performed to extract actinide cross-section important to the Hanford mission. However, it is important to be aware if information is core average or point source data.

Important topics considered in this report for actinide cross-section extraction are use of hands on approach (HOA) methodology and PTABLE2 as a computer application methodology.

This report covers the extraction of actinide cross-sections from the Hanford records on production tests performed to address production or new mission initiatives. Two other reports have been identified to provide a more complete picture of the data that may be gathered and utilized to address criticality safety issues.

- Computer modeling to explore sensitivity calculations (not yet written)
- Initial identification and compilation of potential benchmarks (CHPRC-01590)

2.0 HANFORD REACTORS

2.1 HANFORD REACTORS

During the 1940's to 1960's nine graphite moderated production reactors were built at Hanford to produce plutonium and other useful nuclides. The operating life span for the reactors is given in Figure 1, *Operating History of the nine Hanford Production Reactors*.

The nine Hanford reactors were divided into the following groupings:

- Six small Single Pass Reactors (B, C, D, DR, H, & F)
- Two large Single Pass Reactors (KE and KW)
- One Recirculating Reactor (N)

The six small SPRs and the two large SPRs extracted cooling water from the Columbia River. This water passed through the core and then was returned to the river. The last reactor designed and built at Hanford, during the mid 1960's, was the N Reactor. This reactor used a re-circulating primary cooling system and included electricity production capability.

The K Reactors were physically the largest piles at Hanford. The front face of the K Reactor, shown in Figure 2, *Front Face of Hanford K Reactor*, contained 3,220 process tubes penetrating the core. Aluminum (Al) clad uranium low-enriched uranium (LEU) metal fuel elements, Figure 3, *Fuel Dimensions of Hanford Reactor Fuel*, were loaded into ribbed process tubes. The N Reactor contained 1,003 process or pressure tubes (Figure 4, *Front Face of Hanford N Reactor*) which were loaded with LEU co-extruded metal fuel. N Reactor produced power for the Northwest grid. Between 1970 and 1980, N Reactor was the largest power producing reactor in the world. Operation of the reactor required skillful manipulations to maximize plutonium generation and maintain 860 MW electricity power output.

Figure 1. Operating History of the Nine Hanford Production Reactors

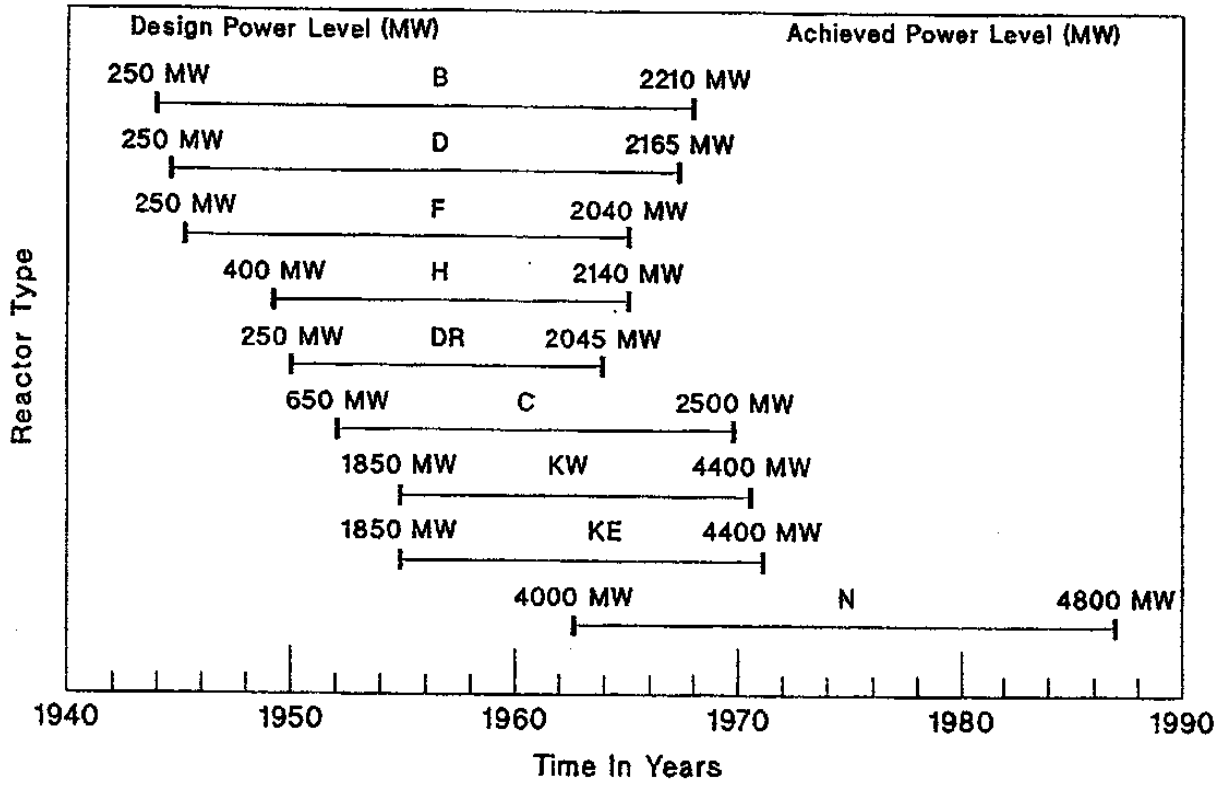

The first reactor (B reactor) was sufficiently well designed to operate for 30 years. N reactor also operated for over 25 years. These reactors are an amazing story of engineering, operation and safety. As a result of this excellence, power levels were raised significantly over the reactor lifetimes.

Figure 2. Front Face of Hanford K Reactor

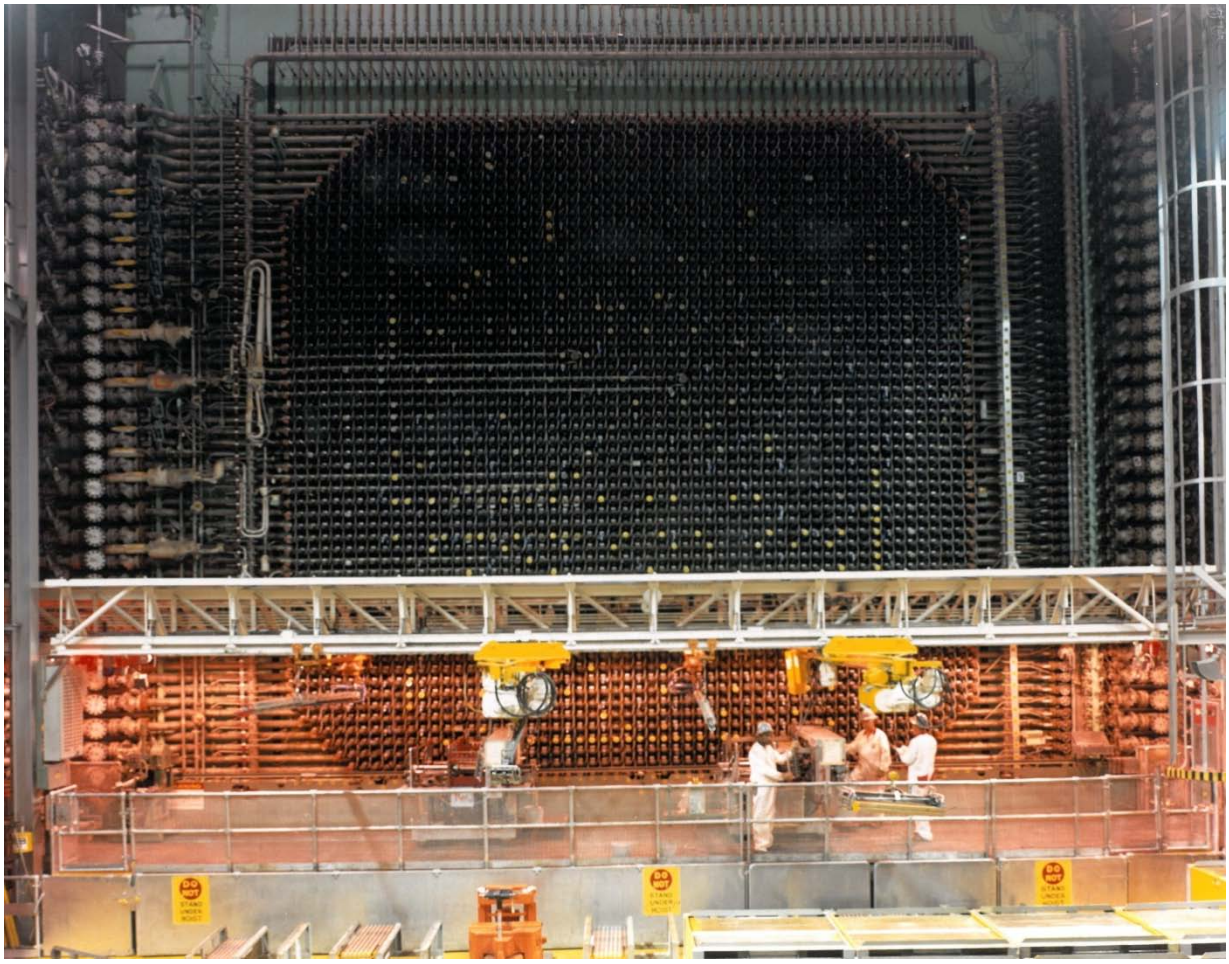

The K Reactors were the largest Hanford production reactors. There were a total of 3,220 process tubes that penetrated the core. Multiple isotope production missions could occur simultaneously in a K Reactor.

Figure 3. Fuel Dimensions of Hanford Reactor Fuel

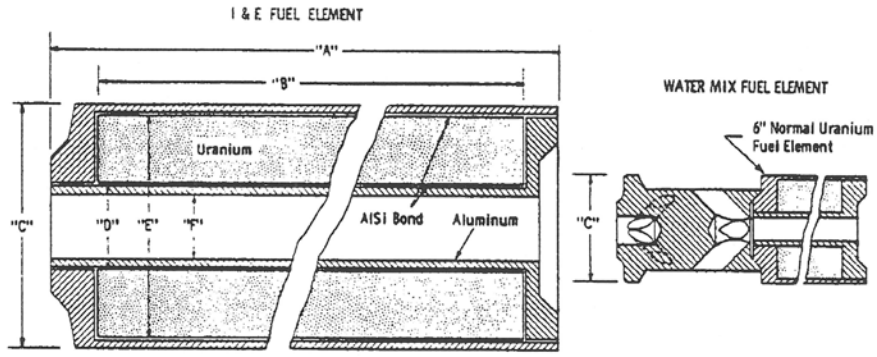

Dimension	Normal Uranium							0.947 % Enriched Uranium				Normal Uranium Watermix		
	C II N	C V N	C VI N	K IV N	K V N	O III N	O V N	C III E	K IV E	K V E	O III E	C III W	K IV W	O III W
A +0.120" -0.080"	8.965"	8.965"	8.865"	8.965"	8.865"	8.965"	4.665"	6.640"	6.640"	6.540"	6.640"	6.640"	6.640"	6.640"
B ±0.010"	8.378"	8.378"	8.325"	8.378"	8.325"	8.378"	4.078"	6.053"	6.053"	6.000"	6.053"	6.053"	6.053"	6.053"
C ±0.006"	1.466"	1.494"	1.986"	1.460"	1.520"	1.444"	1.443"	1.460"	1.459"	1.509"	1.443"	1.460"	1.459"	1.443"
D 1 ±0.007" 2 ±0.004"	0.481" [1]	0.488" [2]	0.452" [2]	0.498" [2]	0.533" [2]	0.423" [2]	0.423" [2]	0.488" [2]	0.513" [2]	0.545" [2]	0.423" [2]	0.488" [2]	0.513" [2]	0.423" [2]
E +0.001" -0.002"	1.370"	1.406"	1.883"	1.370"	1.431"	1.356"	1.356"	1.370"	1.370"	1.419"	1.356"	1.370"	1.370"	1.356"
F ±0.006"	0.375"	0.375"	0.334"	0.385"	0.420"	0.310"	0.310"	0.375"	0.400"	0.432"	0.310"	0.375"	0.400"	0.310"
Nominal Can Wall Thickness Before Canning	0.040"	0.037"	0.045"	0.037"	0.037"	0.037"	0.037"	0.037"	0.037"	0.037"	0.037"	0.037"	0.037"	0.037"
Nominal Spire Wall Thickness Before Canning	0.045"	0.050"	0.050"	0.050"	0.050"	0.050"	0.050"	0.050"	0.050"	0.050"	0.050"	0.050"	0.050"	0.050"
Canned Factor Weight, Pounds	7.37	7.78	14.87	7.29	7.86	7.43	3.60	5.29	5.21	5.49	5.36	5.29	5.21	5.36

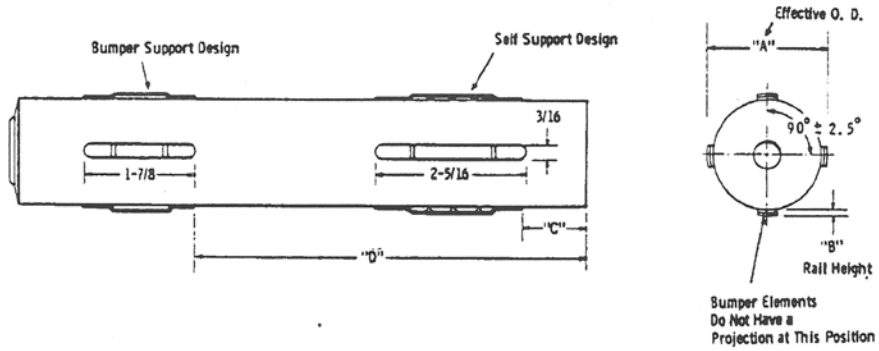

Dimension	I & E Self Supporting Fuel Element			I & E Bumper Fuel Element	
	C V N	C VI N	K V N	O III N	O III E
A ±0.006	1.666	2.130	1.710	1.530	1.530
B ±0.003	0.082	0.069	0.095	0.040	0.040
C ±0.03	1.25	1.25	1.25	1.50	0.56
D ±0.03	5.25	5.25	5.25	5.44	4.06

Later models for SPR fuel have self-supports as shown in the design at the bottom of Figure 3. The most common fuel designs were OIIIN and OIIIE.

Figure 4. Front Face of Hanford N Reactor

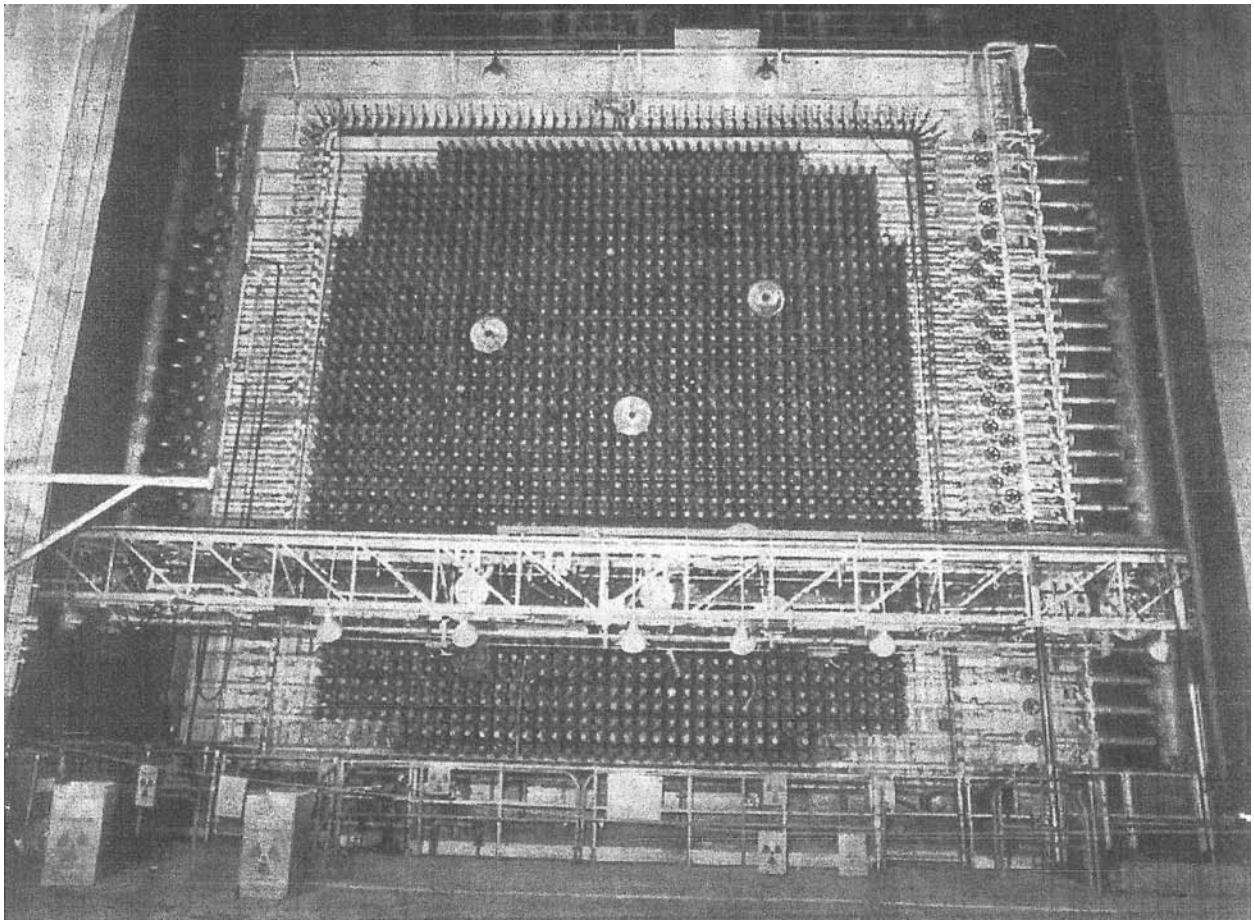

2.2 RELEVANT REACTOR FEATURES

All nine Hanford production reactors had common features, such as graphite moderation, light water cooling, and LEU metal (as fuel material). Control systems, mainly consisting of neutron absorbing rods, entered from the side while the back-up shutdown system was inserted from the top of the core. At N Reactor, process tubes were known as pressure tubes. Since N Reactor was a dual purpose reactor, it had a complex secondary system. Steam generators produced high pressure steam to drive turbines for generating electricity.

Table 1, *Reactor Core Characteristics for Hanford Production Reactors*, lists pertinent features for the nine production reactors. There are essentially no differences between the first six small reactors. A high C/U correlates to a thermal neutron spectrum (average neutron energy). K Reactor allows a slightly harder spectrum while N Reactor has the hardest of all the spectrums. The reason N Reactor needed a more epithermal spectrum was to maximize electric power generation and concurrent isotopes transmutations. N Reactor required an increased base load enrichment of 0.947 wt% U-235 in LEU metal while the other reactors were designed to operate using natural uranium metal fuel. A typical fuel design used in the SPR is shown in Figure 5, *Typical Production Reactor Fuel Elements*. The fuel dimensions and enrichments are given. Base load enrichments were 0.711wt% U-235 in U. A higher enriched fuel was employed to flatten the flux in the spike zone. The fuel with higher enrichment had a central flow channel to dissipate the heat better. The use of multiple enrichments within the reactor complicated the fuel cycle management.

2.3 FUEL CYCLE

The fuel cycle for the Hanford reactors started with the fuel discharge from the reactor. The fuel was stored in the fuel storage basin until sufficient radioactivity and thermal decay had occurred. From the fuel storage basin, the fuel slugs were sent to the Hanford chemical separations plants. Chemical processes were used to separate the U, Pu, Np, and fission products. The LEU was processed into suitable chemical form and was shipped offsite for blending and casting into billets. The billets were returned to Hanford and processed through the fuel fabrication facility at Hanford. Clad fuel slugs and/or co-extruded N Reactor fuels were sent out to the reactor sites to begin a new irradiation. See Figure 6, *Fuel Cycle for Hanford Reactor*, for details.

2.4 EVOLUTION OF HANFORD REACTOR MISSION

The evolution of Hanford production reactor capacity was adjusted to meet national needs. As the need for plutonium decreased, see Figure 7, *Production Mission at Hanford*, efforts were underway to find and implement alternate production missions. To support increased production required a better understanding of neutron absorption from cross-sections and other basic reactor physics parameters. Improved ability of predicting localized isotope transmutations became even more significant as new irradiation missions were considered. These new irradiation missions included neptunium-plutonium 238 production, tritium production, formation of U-233 from thorium, and deep burn missions of depleted fuel targets for the production of actinides.

Until 1966, no particular efforts were made to produce measurements that could be repeated. Discharge batches were composed of fuel with different exposures from a multitude of locations in the core. Dissolved sample data was analyzed providing a gross appraisal of isotopic products with no clear cut appreciation of the impact of subtle changes to fuel structure, neutron flux, and spectra.

Figure 5. Typical Production Reactor Fuel Elements

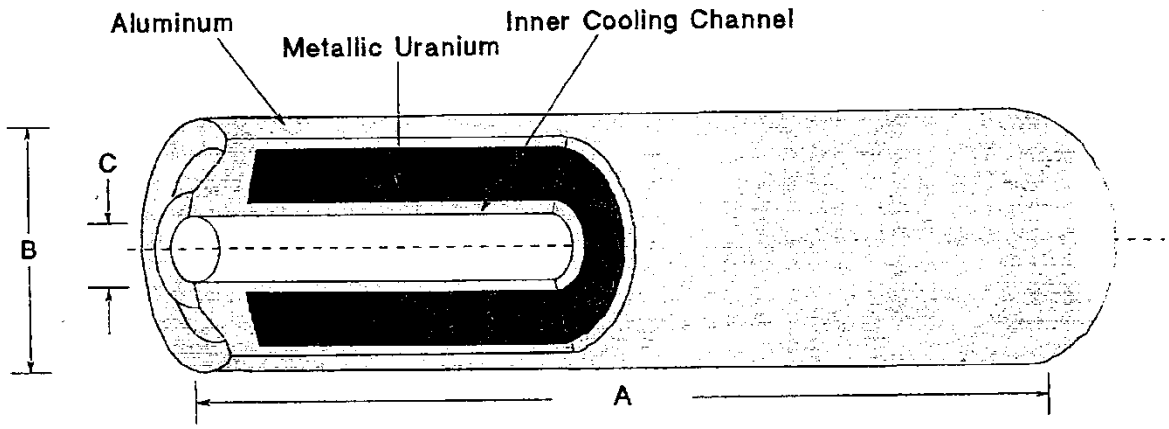

		External Dimensions			Uranium Core Dimensions		
Fuel Type	^{235}U Content (wt%)	A (in.)	B (in.)	C (in.)	Length (in.)	OD (in.)	ID (in.)
OIIIN	0.711	8.965	1.444	0.310	8.378	1.356	0.423
CIIN	0.711	8.965	1.466	0.375	8.378	1.370	0.450
KVN	0.711	8.865	1.520	0.420	8.325	1.431	0.538
OIIIE	0.947	6.640	1.443	0.310	6.053	1.356	0.423
CIIIE	0.947	6.640	1.460	0.375	6.0503	1.370	0.488
KVE	0.947	6.540	1.509	0.432	6.007	1.419	0.545

Figure 6. Fuel Cycle for Hanford Reactor

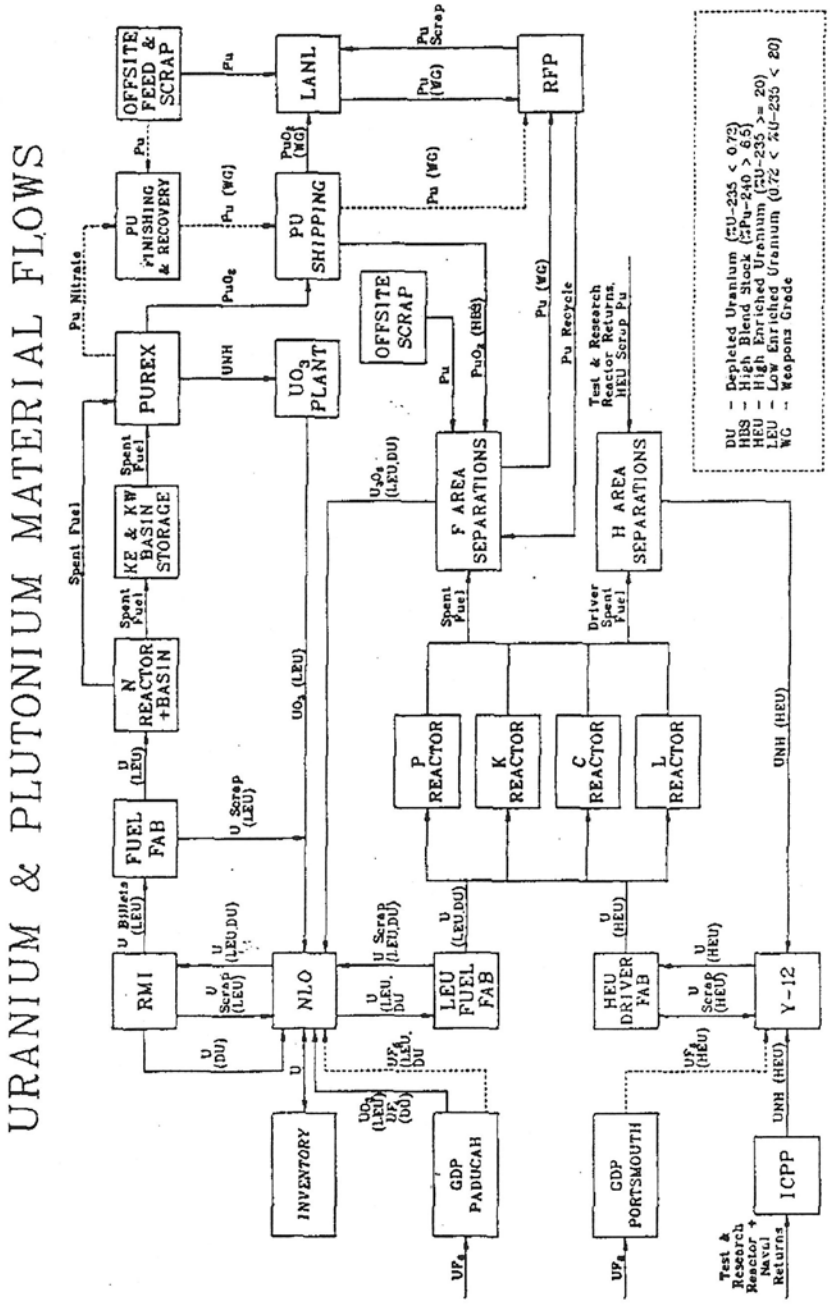

Hanford reactor operations, spent fuel in storage pools and uranium/plutonium separations processing represents only a small part of greater DOE fuel cycle.

Figure 7. Production Mission at Hanford

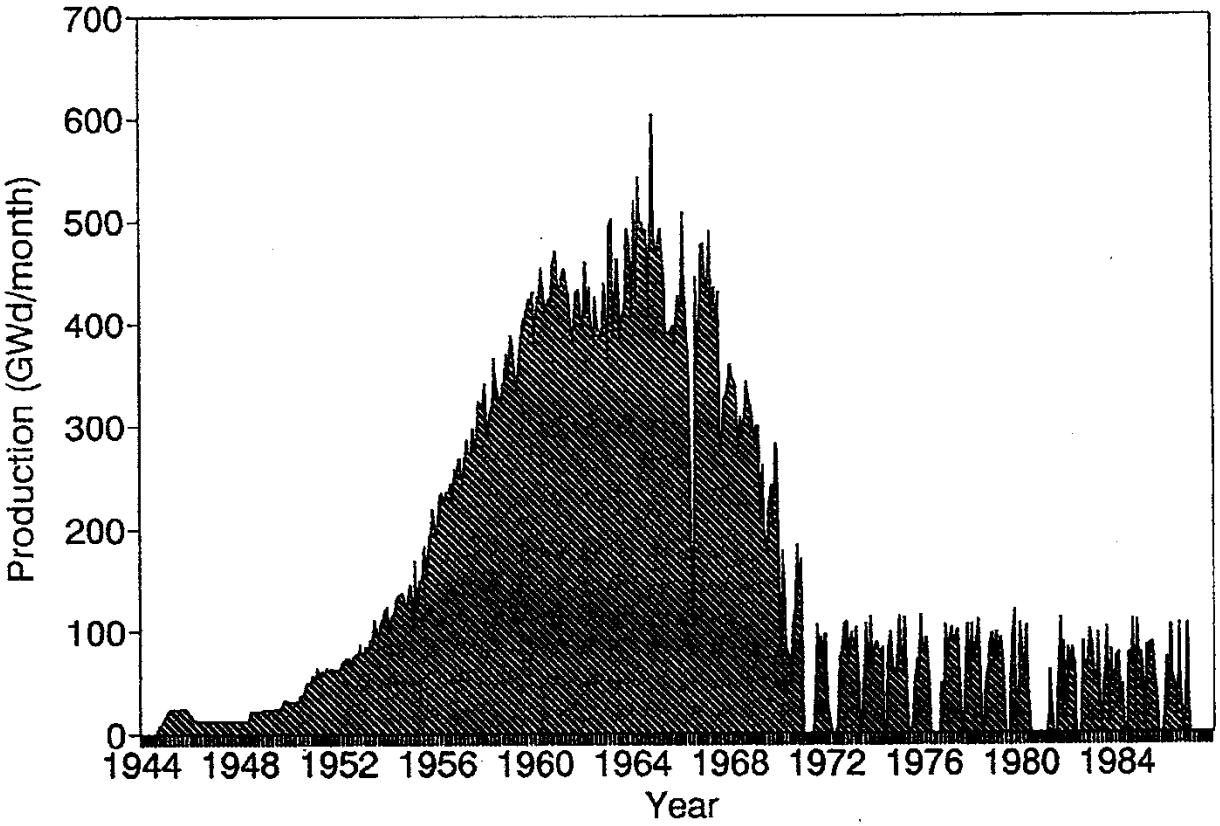

Most of the production was achieved between 1956 and 1970. N Reactor continued operation through the mid-1980's as an electricity and isotope production reactor. N Reactor was shut down permanently in 1986 as a result of the Chernobyl reactor accident.

Table 1. Reactor Core Characteristics for Hanford Production Reactors

		Reactors								
		B	D	F	DR	H	C	KE	KW	N
Graphite Stack Dimension										
(Core + Reflector)	Axial (m)	8.53	8.53	8.53	8.53	8.53	8.53	10.21	10.21	11.88
	Vertical (m)	10.97	10.97	10.97	10.97	10.97	10.97	12.50	12.50	10.06
	Width (m)	10.97	10.97	10.97	10.97	10.97	10.97	12.50	12.50	10.06
Mass of Graphite	Moderator (MT)	1089	1089	1089	1089	1089	1089	1542	1542	725
	Reflector	544	544	544	544	544	544	907	907	907
Lattice Pitch (cm)		21.27	21.27	21.27	21.27	21.27	21.27	19.05	19.05	20.32
C/U Atomic Ratio (Typical Loads)		101	99	100	106	109	100	78	77	34
Number of Process Tubes		2004	2004	2004	2004	2004	2004	3220	3220	1003
Material of Process Tubes		Al	Al	Al	Al	Al	Al	Al/Zr	Al/Zr	Zr-2
Horizontal Control Rods		9	9	9	9	15	15	20	20	84
Vertical Control Rods		29	29	29	29	45	44	41	41	.
Ball Channels		29	29	29	29	45	45	51	51	107

3.0 TOPICS FOR CROSS-SECTION EXTRACTION

3.1 BACKGROUND

During the operation of the Hanford production reactors, a continuous effort took place to understand and to improve plutonium and neptunium production. Both depletion and build-up of actinides had to be considered. Special computer codes or analysis tools, such as MOFDA for Single Pass Reactor Analysis and DCODE (DUN-5330) for N Reactor evaluation, were gradually developed. Any improved data was incorporated into these codes. Improved operating information also enabled the engineers to evaluate power levels and raise them if justified. As the operating experience improved, the power levels were increased well in excess of the design power values, see Figure 1.

Tests in the 1970's focused on specific reactor locations, operating history and product quality. The number of process tubes, the position of the fuel charge and the type of fuel charge were recorded. The production of actinides with higher mass numbers was attempted by irradiating depleted uranium metal.

3.2 DATA HANDLING

In the late1960's, computers became more prevalent and system and core analysis computer codes appeared in the work place. Information obtained from measurements and operation experience was gathered into notebooks and reference documents that gradually became computer codes such as DCODE (DUN-5330).

Ultimately reaction rate and cross-sections were calculated using the hands on approach (HOA) documented in UNI-2592 and compared to WIMS calculations in UNI-2592, a sophisticated multi-group lattice analysis code. Relatively reasonable agreement exists between the UNI-2592 research and approach and WIMS one-group values (for mathematical details see UNI-2592). Both are trying to solve the same problem, an improved understanding of Np production and the build-up of U-236 and its impact on Np production. In addition to this HOA, a computer code (PTABLE2) (UNI-3771), written in the 1980's, was used to update the N Reactor production tables incorporating the results of the more current radio-chemical analyses. The PTABLE2 results compared favorably with WIMS results (UNI-2592).

Both the UNI-2592 and PTABLE2 are being modified to permit different Hanford SPR tests to be evaluated. It is hoped that sufficient background information can be documented to declare some of the Hanford burn-up credit documentation as benchmarks.

An effort was made to collect all pertinent experimental information from SPR that could prove useful in one document. DUN-7243 RD, "Experimental Isotopic Analysis of Past Exposure Data in Hanford Production Reactor Fuel," became that document. The data collection contained in this document should be of potential value for:

- Validation of computer codes for burn-up credit consideration
- Comparison of cross-section models for actinides
- Possible actinide characterization

DUN-7243 RD compiled data from seven different production tests were performed in the Hanford SPR that had associated detailed radio-chemical analyses. Table 2, *Selected Process Test Experiments Providing Cross-Section Data for the U-Pu Tree*, provides a listing for the seven tests reported in DUN-7243 RD that includes:

- a brief test description,
- the production test number,
- the reactor used for the irradiation, and
- the number of radio-chemical samples processed.

Test numbers were assigned according to the production tests listed in the table, see Table 2. In all, there are seven reactor configurations with a total of 47 radio-chemical analysis points. Of these tests, Test 1 (production test PTA-069) was selected for extracting cross-sections. The test used a mature fuel design, OIIIN, with well-defined input isotopes.

There exists ample radio-chemical data. Fuel geometry and enrichments are given in Table 3, *Fuel Element Dimensions*, and lend themselves to improved production and sensitivity studies. Data were collected in the core and subsequent to discharge.

Each of the seven tests had a specific objective. Tests 1, 5, and 6 were dedicated to isotope production inside the fuel matrix. Test 1 was intending to get more information on U-236 formation, production of Np-237, and Pu-238. Chemical analysis data points were obtained for every test. Test 1 resulted in 16 data points. The test was performed in the B Reactor. Emphasis was on repeatability and quality data. The objectives of PTA-069 were accuracy in prediction of isotopes. This test may also provide a benchmark for nuclear depletion codes.

Figure 8, *Location for Various Tests in the B Reactor*, shows the B Reactor test location map and includes the following relevant test data:

- the test process tube locations
- the charge length
- the irradiation time (charge and discharge dates)
- the location of the control rods
- the locations where isotopic flux traverse wire and gross gamma scans were acquired

For comparison, one tube was charged into the core fringe region. There was redundancy built into the test. If an element failed, there was a parallel configuration element that would continue irradiating for that position. In-core movable splines were used to obtain activation traces of the irradiation. Subsequent to discharge, gross gamma scans could be obtained. As it appears, a very extensive testing program for SPR was in place. Unfortunately, some of the irradiation had to be terminated due to reactor shut down. Test 1 had a complete 30 day irradiation cycle without any interruptions.

The objective of the PTA-069 was to measure:

- U-236 build-up as a function of exposure
- Exposure dependence of Np production from U precursors
- Np dependence on original U-236 quantities
- Issues resolution associated with resonance shielding
- Neutron spectrum impacts on U-236 formation and Np production

The range of desired exposures was 300MWD/T – 900MWD/T with a high exposure option 1800MWD/T. To achieve redundancy, the fuel slugs had alternate slug U-236 loadings, (6ppm and 400ppm), located in sequence. Neutron activation traverses as well as post irradiation gamma scans were obtained for test PTA-069. The summary results of the test are provided in DUN-7243 RD.

It is believed that a benchmark write-up for actinide transmutation can be generated that will be useful at the present time for computer code validation and future actinide burning reactors and safeguard applications. The most useful application with the most payback is the ability to calculate burn-up and thereby allow burn-up credit determination. It would benefit analyses of fuel storage, transport and handling of spent fuel. Production reactor development tests for N Reactor have mainly involved MKIV and MKIA fuel elements while testing in SPRs utilized OIIIN and OIIIE fuel elements.

Figure 8. Location for Various Tests in the B Reactor

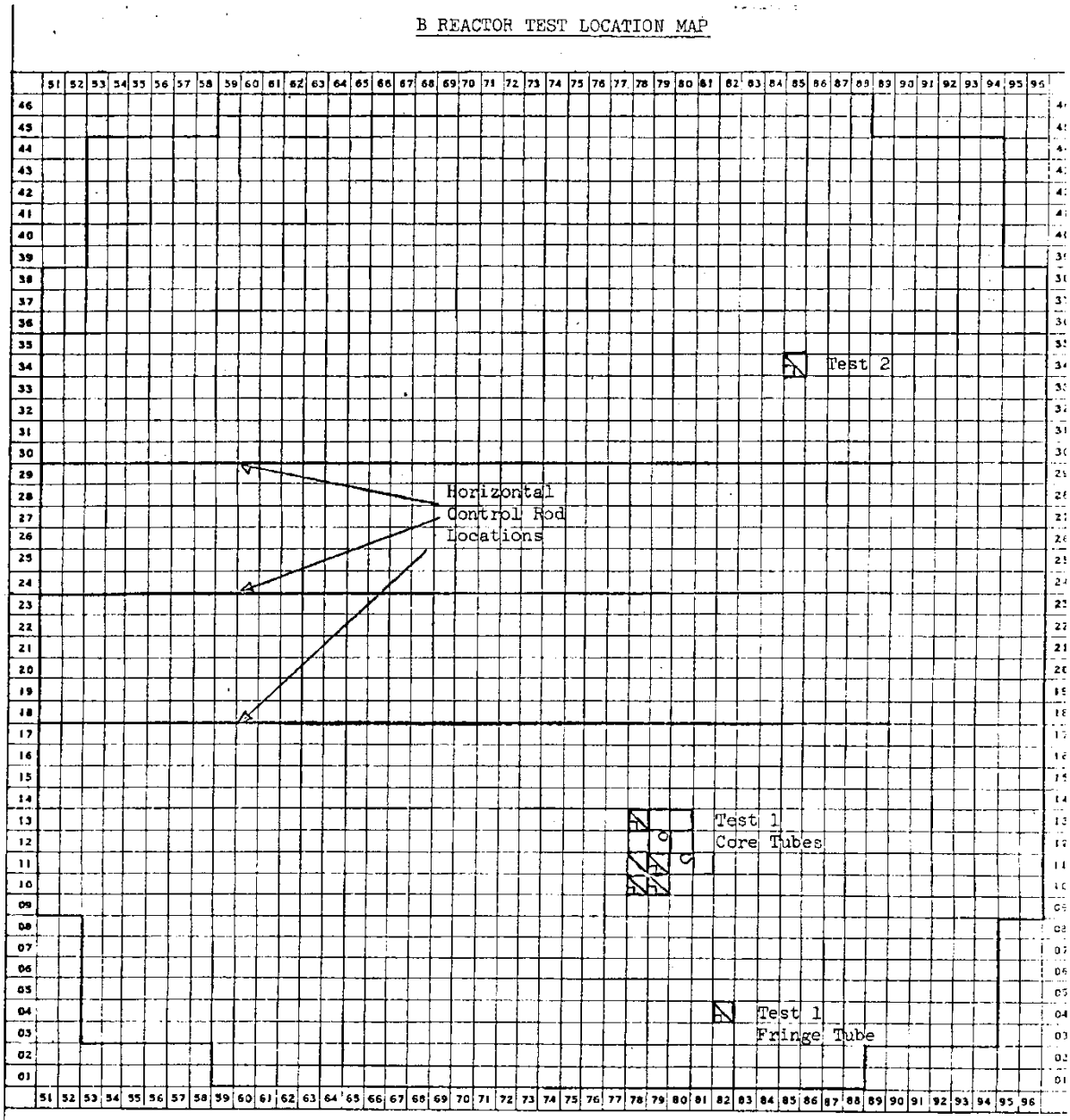

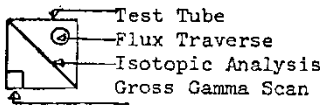

Tube No.	Charge Length	Charged	Discharged
1079,1178	32,32	8/2/67	9/9/67
1179,1181	32,32	"	10/18/67
0582,1078,1280,1380	32,24,32,32	"	11/17/67
1378,1278,1279,1379	24,24,24,24	"	1/12/68
3485	32	5/5/67	11/17/67

Table 2. Selected Process Test Experiments Providing Cross Section Data for the U-Pu Tree

Test Number	Brief Test Description	PTA Number	Reactor	Number of Radio-chemical Sample Analyzed
1	Controlled U-236 and Np-237 production test on O3N fuel	069	B	16
2	High exposure engineering test on O3N fuel	084	B	3
3	Tritium Production in lithium 210 Metal block	054	KE	7
4	Thorium irradiation supported by enriched metal K5E	137	KW	5
5	Controlled U-236 and Np-237 production test in K5E fuel	107	KE	8
6	Depleted uranium irradiation test K5D fuel	048	KE	2
7	Overbore block test on tube and rod fuel CMZE, CMIE fuel	103	C	6

Table 3. Fuel Element Dimensions

		O3N	K5E	KX2.1	K5D	CMIE	CM2E
Fuel Enrichment (wt. %)		0.711	0.947	2.1	0.143	0.807	0.807
Diameters	**Tolerances**	**O3N**	**K5E**	**KX2.1**	**K5D**	**CMIE**	**CM2E**
Tube							
OD Clad(in)	(±.006)	1.444	1.509	1.475	1.520	2.451	2.393
OD Core(in)	(±.002)	1.356	1.419	1.375	1.431	2.361	2.310
ID Core(in)	(±.004)	0.423	0.545	0.633	0.533	1.324	1.270
ID Clad(in)	(±.006)	0.310	0.432	0.520	1.420	1.234	1.187
Rod							
OD Clad(in)	(±.006)	--	--	--	--	0.957	0.957
OD Core(in)	(±.002)	--	--	--	--	0.867	0.867
Lengths							
Tube							
Clad(in)	(±.09)	8.965	6.540	7.54	8.865	8.870	8.870
Bare(in)	(±.01)	8.378	6.000	7.00	8.325	8.400	8.400
Rod							
Clad(in)	(±.09)	--	--	--	--	8.810	8.810
Bare(in)	(±.01)	--	--	--	--	8.400	8.400
Weights							
Tube							
Clad(lb)		7.43	5.49	5.56	7.86	--	--
Bare(lb)		--	--	--	--	17.25	16.82
Rod							
Clad(lb)		--	--	--	--	--	--
Bare(lb)		--	--	--	--	3.38	3.38

Fuel element dimensions with tolerances as well as fuel element weights and provided to some SPR fuel types.

3.3 HANDS ON APPROACH (HOA)

HOA describes a method to extract integral cross-sections from the set of the first order differential equations.

The overall U-Pu transmutation cycle is shown in Figure 9, *Initial Isotopic Buildup/Depletion Model*. This transmutation cycle needs to be further simplified, as shown in Figure 10, *Simplified Isotopic Buildup/Depletion Model*. The model is still too complicated and further simplification was undertaken. Isotopes with short half-lives, such as days, were lumped into the following isotopes. According to ORIGEN (UNI-2592) cross-sections, the Np-237 fission cross-section is far too small to be of concern. The same reasoning applies to U-236 fission cross-section. Also, U-237 and Np-238 decay rapidly and can be included directly into the next isotope in the chain. Figure 11, *Simplified Isotopic Buildup/Depletion Model*, shows the model after these simplifications have occurred. U-237 instantly became Np-237 and Np-238 instantly became Pu-238. Cm-242 and Am-242 have been omitted since their half-lives are relatively short.

With these approximations, the isotope build-up equations can be evaluated. Due to the complexity of neutron flux variations with exposure, they will be ignored in the simple model. The neutron flux level is controlled to provide uniform neutron environment. Some determinations found that the flux level due to isotopic changes did not amount to more than 3%.

For the closed form of the equations, reaction rates can be estimated if scaling factors (such as U-235 concentration) are slowly varying functions of exposure. The equations could be solved numerically, as pointed out in UNI-2592, with the use of PTABLE2.

3.4 MODEL OF ISOTOPE BUILDUP/DEPLETION FOR NUMERICAL ANALYSIS

3.4.1 Overview of Mathematical Analysis

A set of simple differential equations that accurately describe the amounts of each relevant isotopic product as a function of irradiation was developed. The solutions to these equations contained parameters whose values were unknown. The task was to find good values for these parameters, because once the values were determined, isotope production could be accurately predicted using the equations.

The parameters to find were the nuclear reaction rates. They appear in the equations as the neutron flux multiplied by the appropriate nuclear cross-section. Values were needed for seven different reaction rates shown in Figure 12, *Initial Model Transmutation Equations*.

The method of least squares was used to find the reaction rates (see UNI-2592 Appendix D). Least square analysis was an ideal method for finding the best values, since both the data and the forms of the functions were known.

Figure 9. Initial Isotopic Buildup/Depletion Model

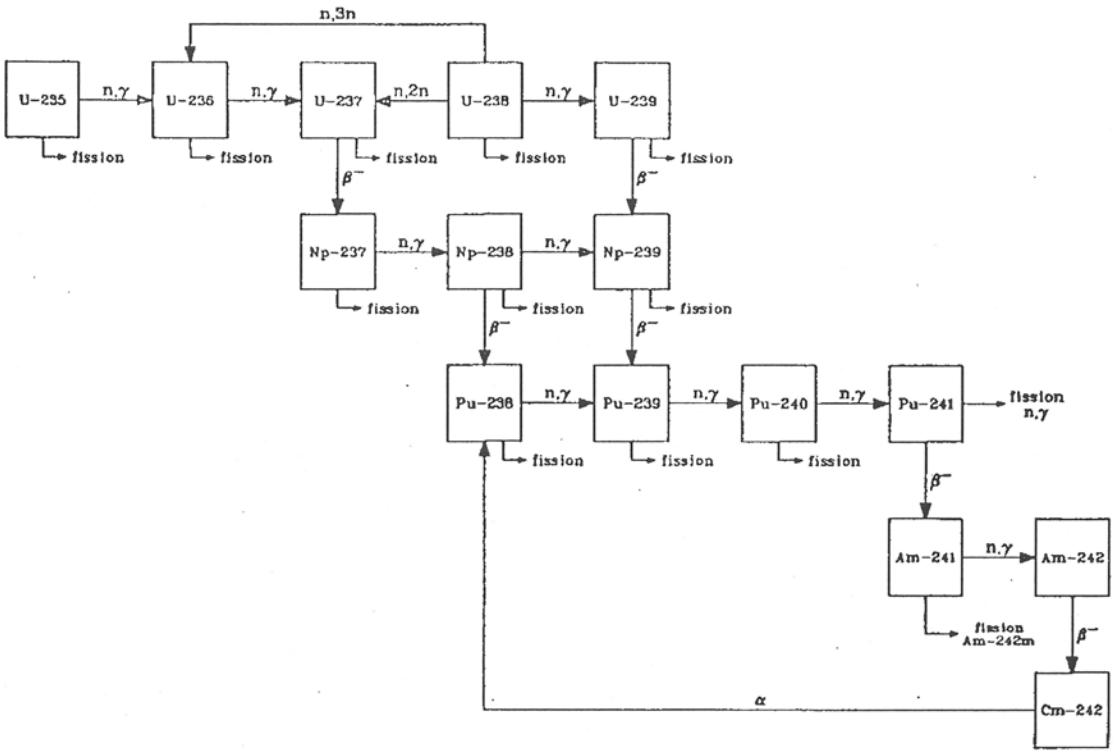

Figure 10. Simplified Isotopic Buildup/Depletion Model

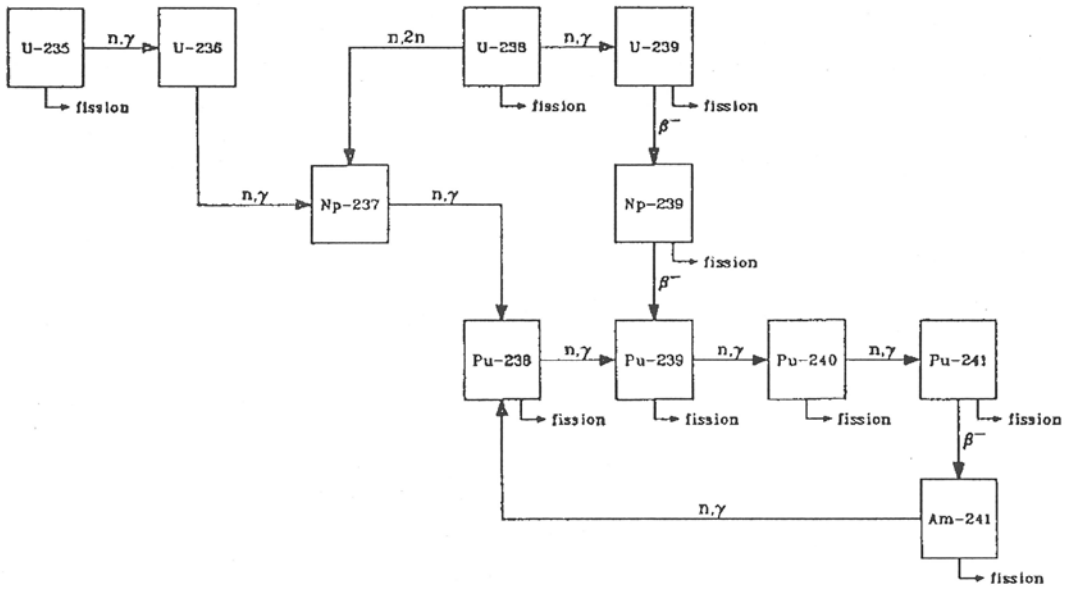

Figure 11. Simplified Isotopic Buildup/Depletion Model

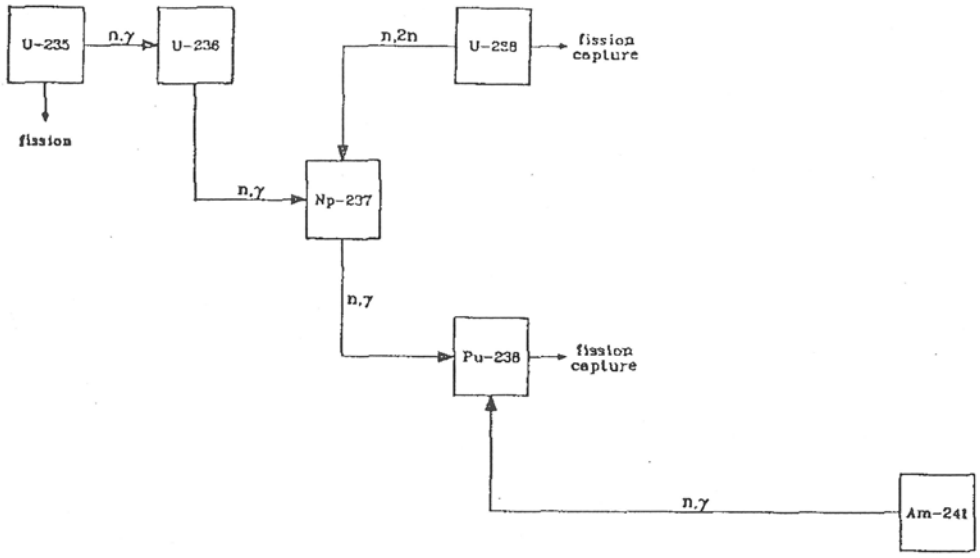

Figure 12. Initial Model Transmutation Equations

$$d(U235) = -(\sigma_c^{25}+\sigma_f^{25})\,\phi t*U235$$

$$d(U236) = -\sigma_c^{26}\,\phi t*U236+\sigma_c^{25}\,\phi t*U235$$

$$d(U238) = -(\sigma_c^{28}+\sigma_f^{28}+\sigma_{n,2n}^{28})\,\phi t*U238$$

$$d(Np237) = -\sigma_c^{27}\,\phi t*Np237+\sigma_c^{26}+\phi t*U236+\sigma_{n,2n}^{28}\,\phi t*U238$$

$$d(Pu238) = -\sigma_c^{48}\,\phi t*Pu238+\sigma_c^{37}\,\phi t*Np237$$

$$d(Pu239) = -(\sigma_c^{49}+\sigma_f^{49})\,\phi t*Pu239+\sigma_c^{28}\,\phi t*U238+\sigma_c^{48}\,\phi t*Pu238$$

$$d(Pu240) = -\sigma_c^{40}\,\phi t*Pu240+\sigma_c^{49}\,\phi t*Pu239$$

$$d(Pu241) = -(\sigma_c^{41}+\sigma_f^{41})\,\phi t*Pu241+\sigma_c^{40}\,\phi t*Pu240$$

$$d(Pu242) = -\sigma_c^{42}\,\phi t*Pu242+\sigma_c^{41}\,\phi t*Pu241$$

$$d(TransPu) = +\sigma_c^{42}\,\phi t*Pu242$$

$$d(Nd148) = (\gamma^{25}\sigma_f^{25}*U235+\gamma^{28}\sigma_f^{28}*U238+\gamma^{49}\sigma_f^{49}*Pu239+\gamma^{41}\sigma_f^{41}*Pu241)\phi t$$

$$d(fisprd) = (\sigma_f^{25}*U235*_A^{25}+\sigma_f^{28}+U238*_A^{28}+\sigma_f^{49}*Pu239*_A^{49}+\sigma_f^{41}*Pu241*_A^{41})\phi t$$

$$d(MWD/T) = ({}_Q^{25}\sigma_f^{25}*U235+{}_Q^{28}\sigma_f^{28}*U238+{}_Q^{49}\sigma_f^{49}*Pu239+{}_Q^{41}\sigma_f^{41}*Pu241)\phi t$$

where:

σ_c^N are microscopic capture cross sections (barns/atom)

σ_f^N are microscopic fission cross sections (barns/atom)

$\sigma_{n,2n}^N$ are microscopic (n, 2n) fission cross sections (barns/atom)

N isotopic reference (25, 26, 28 reference U-235, U-236 and U-238, respectively; 40, 41, 42, 48, 49 reference Pu-240, Pu-241, Pu-242, Pu-238 and Pu-239 respectively; 27 and 37 reference Np-237

ϕ is the neutron flux (neutrons/cm^2-sec)

t is a fixed time increment (sec)

γ are fission yields of Nd-148 for fissioning isotopes (fractions)

A are atomic weights of the fissioning isotopes

Q^N are heats of fission for fissioning isotope, N (MeV/nuclei fissioned)

3.5 Description of Mathematical Model

Figure 13, *Simple Model Transmutation Equations*, depicts the initial model equations devised for the isotope build-up chain. The model is far too complicated to work with. Having a feel for the expected values of the cross-sections and half-lives in advance allowed enormous simplifications without compromising accuracy. The ORIGEN2 (UNI-2592) effective one-group cross-section values indicated that Np-237 fission events are far too rare to be of concern. Also, the U-236 fission cross-section is less than 1.4% of the absorption cross-section. Ignoring U-236 fission is a reasonable approximation since uncertainty in the isotopic quantity data is approximately 1%.

3.6 EQUATION APPROACH FOR SOLUTIONS

The equation approach for solutions utilizes the same simplification process described in Section 3.4. However, since the measured radiochemical data represents core average irradiation histories for the fuel within a dissolver batch, accommodations must be made for this averaging effect.

Following a series of mathematical steps involving least squares, formalisms are developed which can be used to calculate extracted cross-sections for homogeneous mixtures of spent fuel.

The constraints listed below can be applied to the transmutation equations for simplification:

- 3 Mev, rare, high energy
- U-237 and Np-238m rapid decay
- Low cross-section, rare interaction
- Am-242 and Cm-242, short half-life
- Contribution minimum, Pu-238 to Pu-239
- Am-241 becomes independent of U-236

Figure 12 depicts the model equation for the simple model shown in Figure 11. For solutions the following values are used for the analysis:

N(25) (x=0) = N25 (0) = U-235
N(26) (x=0) = N26(0) = U-236
N(37) (x=0) = 0
N(48) (x=0) = 0

Four functions (N25(x), N26(x), N37(x), and N48 should accurately represent the amount U-235, U-236, Np-237 and Pu-238 in MKIV fuel. Good values are needed for each reaction. HEDL data on batch isotopic and chemical concentrations (for example, HEDL-810541) are a reliable source.

Wherever possible, calculations and measurements were compared to WIMs values, the agreement was good.

Figure 13. Simple Model Transmutation Equations

$$dN^{25}/dX = -\phi\sigma_a^{25}N^{25}$$

$$dN^{26}/dX = \phi\sigma_c^{25}N^{25} - \phi\sigma_c^{26}N^{26}$$

$$dN^{37}/dX = \phi\sigma_c^{26}N^{26} + \phi\sigma_{n,2n}^{28}N^{28} - \phi\sigma_c^{37}N^{37}$$

$$dN^{48}/dX = \phi\sigma_c^{37}N^{37} + \phi\sigma_c^{51}N^{51} - \phi\sigma_a^{48}N^{48}$$

where

X = element exposure (MWD/T)

ϕ = neutron flux

σ_a^{25} = U-235 absorption cross-section

σ_c^{25} = U-235 capture cross-section

σ_c^{26} = U-236 capture cross-section

$\sigma_{n,2n}^{28}$ = U-238 n,2n cross-section

σ_c^{37} = Np-237 capture cross-section

σ_c^{51} = Am-241 capture cross-section

σ_a^{48} = Pu-238 absorption cross-section

N^{25} = U-235 grams/ton

N^{26} = U-236 grams/ton

N^{28} = U-238 grams/ton

N^{37} = Np-237 grams/ton

N^{48} = Pu-238 grams/ton

N^{51} = Am-241 grams/ton

4.0 COMPUTER APPROACH TO EXTRACTION OF EFFECTIVE CROSS-SECTIONS

4.1 INTRODUCTION TO PTABLE2

During the operation of production reactors at Hanford, periodic upgrades of the isotope production tables had to take place. In the review of old documents, PTABLE2 (UNI-3771) was discovered. This is a computer code that can be modified to generate new production tables.

The code would take existing cross-sections and chemical results and merge them. The original cross-sections are corrected or upgraded with information from the most recent radio-chemical data. The output of PTABLE2 would be a new and current production table document. The process to formulate a new production table represents an example of cross-section manipulation or extraction. The structure of the code allows expansion of the approach to other transmutation trees (see CHPRC-NS-10-001 and CHPRC-01335).

4.2 PTABLE2 STRUCTURE

The logic flow for PTABLE2 is shown in Figure 14, *PTABLE – Isotopic Production Table Adjustment Code Logic*. The code calculates one group integral cross-sections. PTABLE2 solves numerically the coupled simultaneous differential equations covering the transmutation of actinides as a function of exposure.

An iteration technique is employed to alter the original effective one group cross-sections into a new set that is consistent with the measured radio-chemistry results. The fourth order Runge-Kutta numerical approximation is used. PTABLE2, after some modifications and recompilation, is operational on a current computer.

For homogenized core conditions, the separation plant accountability tank solutions were analyzed for Mark IV (discharge key 14911) and for Mark IA (discharge key 14306). The extracted radio-chemistry data for both discharge keys covered both U and Pu isotopes. Iterations persisted at each exposure step until calculated composition matched the analytical chemistry isotopic composition. The equations describing the transmutations as part of PTABLE2 are given, see Figure 13. A standard four point Lagrange interpolation polynomial was used to interpolate all the isotopes to the same point where the calculations most closely matched the measured experimental U-235 concentrations.

An interactive approach was used to adjust the original effective one-group cross-section into one consistent with the chemistry results. Convergence rapidly reduced the difference. In nine iterations, the difference matches the computer round-off and the final effective one-group cross-sections values were achieved. A pictorial of the set of differential equations is shown, see Figure 9. Boxes representing isotopes of longer half-lives are included. Short lived actinides would rapidly disappear and were not considered further.

The PTABLE2 code was constructed of a main program element and seven multiple function sub-routines. Figure 15, *PTABLE – Isotopic Production Table Adjustment Program Structure*, illustrates the main program and sub-routines and their arrangements. Figure 14 displays the logic flow of the program.

MAIN

Main controls overall program flow and the conversion of computer program units (CPU) to production table units (PTU). Main outputs details relative to solution convergence.

INIT

INIT established initial effective one-group cross-sections for neutron capture, fission, and (n, 2n) reaction of U-238. INIT also initialized atomic weights, fission yields for neodymium-148 and heat of fission. Use of the WIMS code was needed to calculate the Np-237 from the n, 2n reaction and capture from U-237.

ANAL

ANAL has chemistry results for spent fuel after irradiation dates to correct for Pu-241to discharge. ANAL contains historic data on average original isotopic concentrations of U in the discharge key. ANAL converts chemical analysis units to CPU. ANAL performs a slight adjustment to the calculated value of analytic chemistry results to accommodate calculated quantities of fission products and trans-plutonium actinides.

RUNGE

RUNGE solutions of differential equations using 4th order Runge Kutta numeric approximation, computes the Collatz criterion to verify approximate step size. RUNGE calls YPRIME to calculate derivatives of quantities in simultaneous differential equations.

YPRIME

The sub-routine computes all derivatives with RUNGE, YPRIME providing the core of the calculations. Other sub-routines supply them with input or output.

TERP

TERP interpolates on the computed isotopic concentrations as a function of burn-up to match the calculated U-235 concentration to the analytical chemistry U-235 concentration. All other calculated isotopic concentrations are evaluated at the same exposure for later comparison to chemistry results. A four-point Lagrangian interpolation polynomial is used with two points of each side of the interval being interpolated.

FNDXSC

FNDXSC finds cross-section values which will compute the chemistry isotopic concentration at the same burn-up time that the computed U-235 concentration matches the analytical chemistry U-238 concentration. A simple method using ratio of daughter to parent, without resorting to a standard root finding technique, is utilized.

Figure 14. PTABLE - Isotopic Production Table Adjustment Code Logic

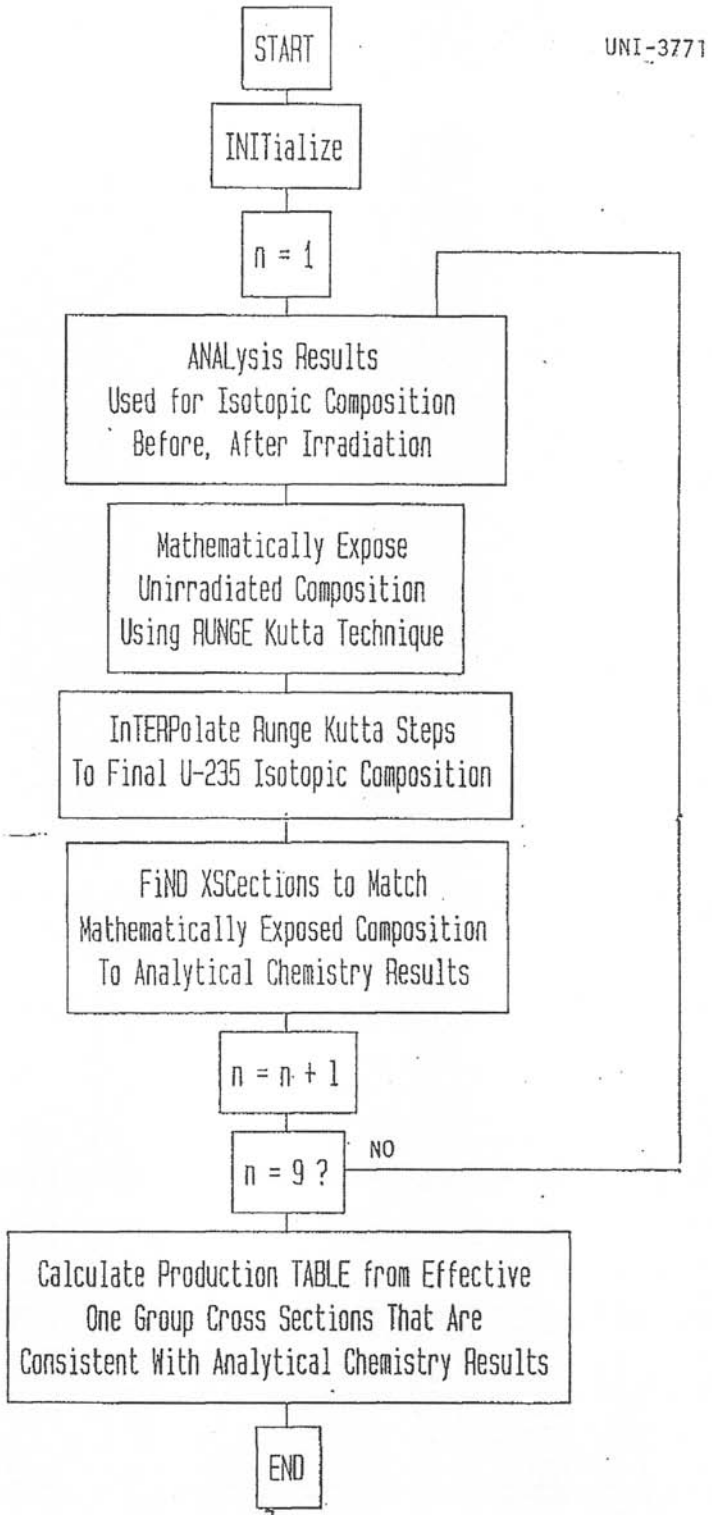

Figure 15. PTABLE - Isotopic Production Table Adjustment Program Structure

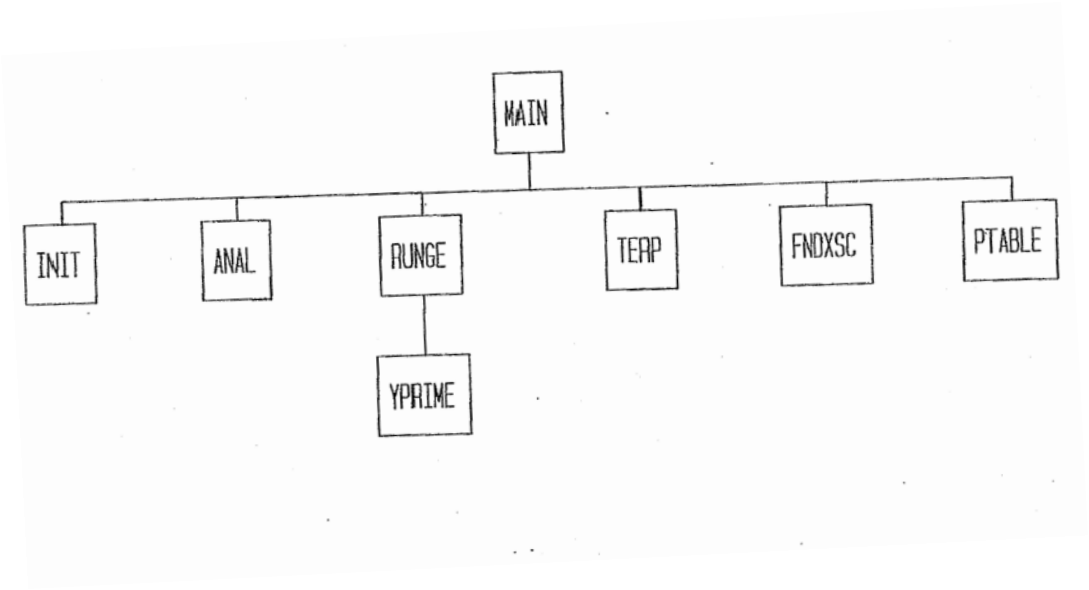

5.0 EXECUTIVE SUMMARY

Since the Hanford reactors started operation, there has been an immense interest in perfecting performance and to reap technical fallout from the nuclear experience. The lack of sophisticated computer codes to evaluate reactor designs was noticeable. Extensive experimentation was carried out to guide safe operation of the reactors. These measurements were used to build codes to improve production. These old, high precision measurements have the potential to serve as benchmarks for graphite moderated reactors. Furthermore, there is still an interest in actinide cross-sections and how to recover the useful data from them.

This paper discusses the methodology for nuclear data extraction and build-up of graphite moderated reactor benchmarks. Such benchmarks could manifest in better utilization of nuclear criticality safety limits. As an experiment, PTA-069 was considered as primary test object data. The analysis approaches are the “hands on approach” built around approximations and interpretations relying heavily on least squares methodology. The second approach involves the use of a computer code PTABLE2 which solves the transmutation equations numerically and adjusts the original cross sections to best match the experimental data.

We have the tools available to extract cross-sections from the material in question. Two approaches were considered. The first was using the HOA and the other was using the PTABLE2 computer code. The focus on HOA was to use hand calculations as much as possible to simplify the problem and give reasonable results compared with other computer codes or measurements. PTABLE2 is strictly a computational tool that solves transmutation equations explicitly for part of the U-Pu tree. PTABLE2 also generates complete production tables for the U-Pu tree.

We were successful in recovering the methodologies and hope to pursue applications to other materials such as Thorium solutions.

6.0 FUTURE WORK

Earlier comparisons were produced using the WIMs code. Since the versions of WIMs are no longer available, a modern code such as SCALE is being used by Oak Ridge National Laboratory (ORNL) for comparisons. Modeling the Hanford reactors with SCALE has turned out to be more time consuming than originally anticipated. The ORNL results are important to extracting cross sections and formulating benchmarks. The ORNL results are also important to understanding sensitivities in the extracted cross sections. Process of case to case comparisons requires the Oak Ridge analysis and the operation of PTABLE2.

Sensitivity results will be generated and reported for a portion of the U-Pu Tree using PTABLE2 and hopefully SCALE. These methodologies will be extended to other transmutation data in later reports.

7.0 REFERENCES

Interoffice Memorandum, R. J. Puigh to C. E. Morgan, *Hanford 1P&D Subtask 3: Actinide Cross-Section Extraction Status Report I*, CHPRC-NS-10-001, dated January 11, 2010, CH2M HILL Plateau Remediation Company, Richland, Washington.

CHPRC-01335, 2011, *Relevant Reactor Operations Data Quarterly Letter Report*, Revision 0, H. Toffer, CH2M HILL Plateau Remediation Company, Richland, Washington.

DUN-5330, 1968, *DCODE - A Fuel Design/Analysis Code for the UNIVAC 1108*, I. Thierer, November 1968, Douglas United Nuclear, Inc., Richland, Washington.

UNI-2592, 1986, *Pu-23 8 Production from Initial U-236 in MKIV Fuel Based on Measurement*, W. D. Wittekind and J. Clayhold, September 12, 1986, UNC Nuclear Industries, Richland, Washington.

DUN 7243 RD, *Experimental Isotopic Analysis of Past Exposure Data in Hanford Production Reactor Fuel*, Douglas United Nuclear, Inc., Richland, Washington.

UNI-3771, 1985, *N Reactor Isotopic Production Tables Calculated Adjustment of November 15, 1985 using the Computer Code PTABLE2*, W.D. Wittekind, UNC Nuclear Industries, Richland, Washington.

HEDL-810541, *Burnup and Associated Analysis Results for N-Reactor Spent Fuel Sections – Data Sheets*, W.Y. Matsumoto, Hanford Engineering Development Laboratory, Richland, Washington, February 1986.